NACIONAL MOTOR, S.A.U. DERBI

C/ Barcelona, nº19 - Martorelles 08107 - BARCELONA (SPAIN)
Tel. 93 565 78 78 - Fax 93 565 78 52

SENDA SM X-TREM'03 E1 & E1R

CÓDIGO CATÁLOGO
CATALOGUE NUMBER 7077CH03003

CIAN - ABRIL 2003
Depósito legal: GI - ??? - 03

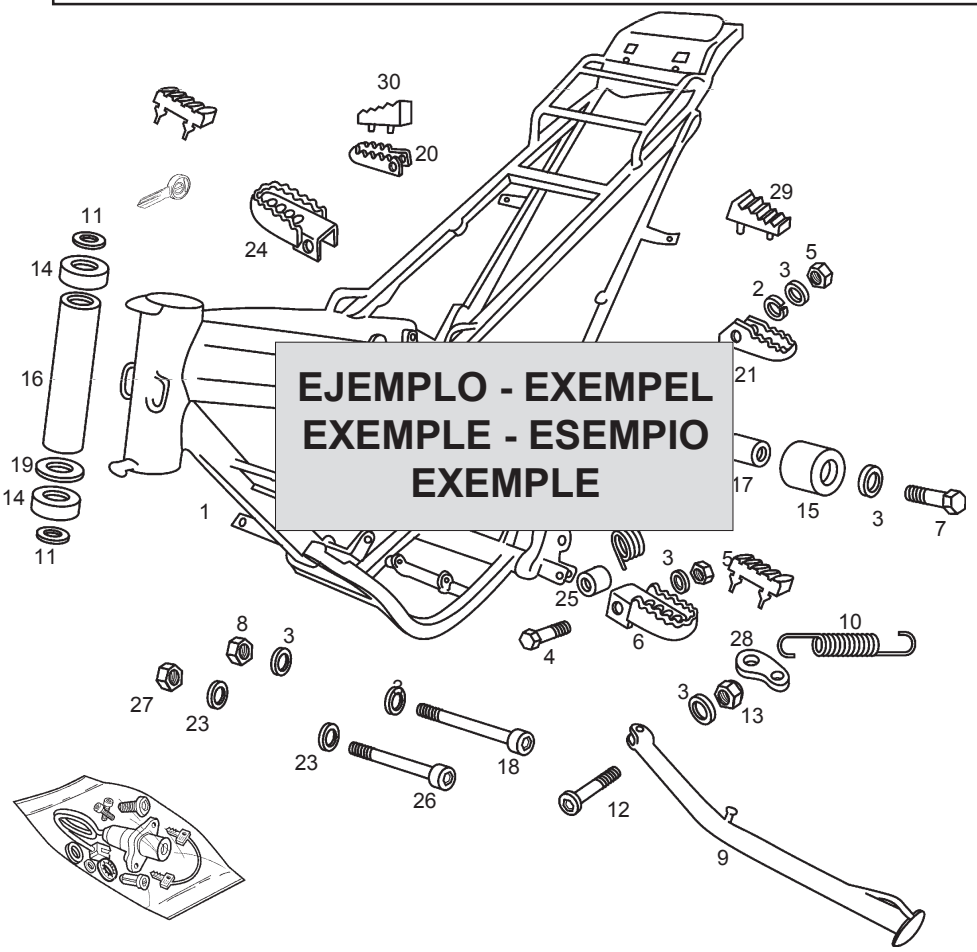

EJEMPLO - EXEMPEL
EXEMPLE - ESEMPIO
EXEMPLE

Fig.	Ver.	COD. KOD.	DESCRIPCIÓN DENOMINAZIONE NAME	BEZEICHNUNG DESIGNATION	MOD.	Nº CHASIS Nº TELAIO FRAME NUM. N.º CADRE Nr. RHAMEN
01A		00G01924601	R-SCTO.CUADRO C/COJIN. ATLANTIS TELAIO FRAME SUB-ASSEMBLY	RHAMEN CADRE COMPLET	12	XXXXXXX
01A	01	00G01924601	R-SCTO.CUADRO C/COJIN. ATLANTIS TELAIO FRAME SUB-ASSEMBLY	RHAMEN CADRE COMPLET	12	XXXXXXX
01A	02	00G01924601				
01A	03	00G01924601	R-SCTO.CUADRO C/COJIN. ATLANTIS TELAIO FRAME SUB-ASSEMBLY	RHAMEN CADRE COMPLET	12	XXXXXXX
1		5		8	6	7

1- Código de localización de piezas. **2**- Código indicativo de pieza reemplazada. **3**- Código indicativo de pieza anulada. **4**- Código indicativo de pieza restituida (esta se monta de nuevo). **5**- Código de referencia de la pieza. **6**- Identificación de modelos. **7**- Los códigos de esta casilla indican que, a partir del número de chasis o motor indicado dentro de esta, se monta una nueva pieza que reemplaza a la anterior (sección 2), que una pieza no se monta (sección 3), o que la pieza anulada se monta de nuevo (sección 4), y concierne a los modelos indicados (sección 6). **8**- Denominación de la pieza.

1- Codice di localizzazione pezzi. **2**- Codice indicatore del pezzo sustituito. **3**- Il pezzo precedente non si monta. **4**- Codice indicatore dei pezzi che si tornano a montare. **5**- Codice di identificazione del pezzo. **6**- Identificazione del modello. **7**- Il codice di questa casella indica che, dal numero di Telaio/motore indicato,si monta un nuovo pezzo che sustituisce il precedente (sezione 2), che un pezzo non si monta (sezione 3), oppure che il pezzo annuallato si monta di nuovo (sezione 4), facendo riferimento al modello indicato (sezione 6). **8**- Denominazione del pezzo.

1- Part location number. **2**- Substituted part number. **3**- Withdrawn part number (no longer fitted). **4**- Restored part number (newly fitted geing withdrawn). **5**- Part reference number. **6**- Model identification number. **7**- Chassis or engine number from which a new part is fitted substituting a part which has been withdrawn (see para 2) or a part is withdrawn is fitted again (see para 4), in the models indicated (see para 6). **8**- Part identification label.

1- Zeicungs - Number. **2**- Ausführung. **3**- Gestrichene Ersatzteilnummer. **4**- Ersetzte Ersatzteilnummer. **5**- Ersatzteilnummer. **6**- Modell - Nummer. **7**- Rhamen - order motonummer, für die ein neues teil eingestzt wird, z.b. eine nummer, die geändert (s. para 2), order ein teil, das gestrichen wurde (s.para 3), order ein teil, das vorübergehend verschiedene modelle (s. para 6) **8**- Bezeichnung.

1- Code de localisation de la pièce. **2**- Code indicateur de pièce remplace par un autre. **3**- Code indicateur de pièce annulé (elle n'est plus montée). **4**- Code indicateur de pièce restituée (elle se monte á nouveau). **5**- Code référence de la pièce. **6**- Les codes de cette case indiquant qu'à partir de numero **7**- Chassis ou de moteur indiqué, un nouvelle pièce est montée en replacement d'une autre (section 2),q'une pièce n'est plus montée (section 3) ou la pièce

IDENTIFICACION DE MODELOS REPRESENTADOS EN ESTE CATALOGO SEGUN LOS DIGITOS SIGUIENTES

IDENTIFICAZIONE DEI MODELLI RAPPRESENTATI IN QUESTO CATALOGO SECONDO I NUMERI A SEGUIRE

THE MODELS REFERRED INTO THIS CATALOGUE ARE IDENTIFIED BY FOLLOWING NUMBERS

BESTIMMUNG DER VERSCHIEDENEN MODELLE IN DIESEM KATALOG

IDENTIFICATION DES MODELOES REPRESENTES DANS CE CATALOGUE, EN FUNCTION DES CODES SUIVANTS

MODELO MODELLI MODEL MODELL MODELE	DENOMINACION DENOMINAZIONE MODEL NAME BEZEICHNUNG DENOMINATION	CODIGO MODELO CODICE MODELLI CODE MODEL KODE MODELL CODE MODELE
1	SENDA SM X-TREM'03 E1 ESPAÑA NEGRO	00H00027E283
2	SENDA SM X-TREM'03 E1 ESPAÑA VERDE	00H00027E253
3	SENDA SM X-TREM'03 E1 ESPAÑA AZUL	00H00027E245
4	SENDA SM X-TREM'03 E1 ESPAÑA ROJO	00H00027E233
5	SENDA SM X-TREM'03 E1 FRANCE BLACK	00H00027F283
6	SENDA SM X-TREM'03 E1 FRANCE GREEN	00H00027F253
7	SENDA SM X-TREM'03 E1 FRANCE BLUE	00H00027F243
8	SENDA SM X-TREM'03 E1 FRANCE RED	00H00027F233
9	SENDA SM X-TREM'03 E1 BLACK	00H00027U281 00H00027X281
A	SENDA SM X-TREM'03 E1 GREEN	00H00027U251 00H00027X251
B	SENDA SM X-TREM'03 E1 BLUE	00H00027U241 00H00027X241
C	SENDA SM X-TREM'03 E1 RED	00H00027U231 00H00027X231

IDENTIFICACION DE MODELOS REPRESENTADOS EN ESTE CATALOGO SEGUN LOS DIGITOS SIGUIENTES

IDENTIFICAZIONE DEI MODELLI RAPPRESENTATI IN QUESTO CATALOGO SECONDO I NUMERI A SEGUIRE

THE MODELS REFERRED INTO THIS CATALOGUE ARE IDENTIFIED BY FOLLOWING NUMBERS

BESTIMMUNG DER VERSCHIEDENEN MODELLE IN DIESEM KATALOG

IDENTIFICATION DES MODELOES REPRESENTES DANS CE CATALOGUE, EN FUNCTION DES CODES SUIVANTS

MODELO MODELLI MODEL MODELL MODELE	DENOMINACION DENOMINAZIONE MODEL NAME BEZEICHNUNG DENOMINATION	CODIGO MODELO CODICE MODELLI CODE MODEL KODE MODELL CODE MODELE
D	SENDA SM X-TREM'03 E1R ESPAÑA NEGRO	00H00027E381
E	SENDA SM X-TREM'03 E1R ESPAÑA VERDE	00H00027E351
F	SENDA SM X-TREM'03 E1R ESPAÑA AZUL	00H00027E341
G	SENDA SM X-TREM'03 E1R ESPAÑA ROJO	00H00027E331
H	SENDA SM X-TREM'03 E1R FRANCE BLACK SENDA SM X-TREM'03 E1R ENGLAND BLACK SENDA SM X-TREM'03 E1R ITALY BLACK	00H00027F381 00H00027G381 00H00027I381
I	SENDA SM X-TREM'03 E1R FRANCE GREEN SENDA SM X-TREM'03 E1R ENGLAND GREEN SENDA SM X-TREM'03 E1R ITALY GREEN	00H00027F351 00H00027G351 00H00027I351
J	SENDA SM X-TREM'03 E1R FRANCE BLUE SENDA SM X-TREM'03 E1R ENGLAND BLUE SENDA SM X-TREM'03 E1R ITALY BLUE	00H00027F341 00H00027G341 00H00027I341
K	SENDA SM X-TREM'03 E1R FRANCE RED SENDA SM X-TREM'03 E1R ENGLAND RED SENDA SM X-TREM'03 E1R ITALY RED	00H00027F331 00H00027G331 00H00027I331
L	SENDA SM X-TREM'03 E1R AUSTRIA BLACK SENDA SM X-TREM'03 E1R BENELUX BLACK	00H00027U381 00H00027X381
M	SENDA SM X-TREM'03 E1R AUSTRIA GREEN SENDA SM X-TREM'03 E1R BENELUX GREEN	00H00027U351 00H00027X351
N	SENDA SM X-TREM'03 E1R AUSTRIA BLUE SENDA SM X-TREM'03 E1R BENELUX BLUE	00H00027U341 00H00027X341
O	SENDA SM X-TREM'03 E1R AUSTRIA RED SENDA SM X-TREM'03 E1R BENELUX RED	00H00027U331 00H00027X331

Relación Piezas Diferenciadas por el Color
Lista Parti Coloranti
Color Combination Parts List
Farbcode
Liste des Piéces Similaires Codifiées par Coleur

Color / Colore / Colour / Coleur / Farbe:

NEGRA "ESPAÑA" / NEGRO / BLACK / SCHWARZ / NOIR

Cod. Kod.	Denominación Denominazione Name	Bezeichnung Denomination
00H00414682	TAPA SUP. DEPSTO. NEGRO SUBCOMP.CARCASSA SUP.SERB. TOP TANK FRAME	TANKKLAPPE COUVERCLE DE RESERVOIR
00H00541698	SCTO.TAPA LAT.DR..C/C NEGRA SUBCOMP.COPERC.LAT.DES.C/C. RIGHT HAND SIDE COVER	SEITENDECKEL RECHTS PLAQUE LATERAL DROITE AVEC
00H00541708	SCTO.TAPA LAT.IZ..C/C NEGRA SUBCOMP.COP.LAT.SIN.C/C. LEFT HAND SIDE COVER	SEITENDECKEL- LINKS FLANC LAT.G.AVEC DECAL
00H00618014	CTO.SILLIN SENDA NEGRA COMP.SELLINO SEAT	SITZBANK SELLE
00H00708438	GUARDAB. DT. NEGRA PARAFANGO ANTERIORE FRONT MUDGUARD ASSY	KOTFLUGEL VORN GARDE-BOUE AVANT RGE
00H02229378	SCTO.CARC.FARO NEGRA SUBCOMP.CARC.FARO C/C. HEADLIGHT CUSING SUB-ASSEMBLY	SCHEINWERFERVERKLEIDUNG PLAQUE PHARE
00H04427808	SCTO. TAPA DT. DR. NEGRA SUBCOMP.COP.ANT.DES.C/C. FRONT LH ADORNMENT	SEITENTEIL OUIE MOTEUR D.
00H04427838	SCTO. TAPA DT. IZ. NEGRA SUBCOMP.COP.ANT.SIN.C/C FRONT RH ADORNMENT	KHULERVERKLEIDUNG OUIE MOTEUR G.
00H04912098	SCTO. COLIN C/C NEGRA COLIN SELLINO SEAT BASE	KOTFLUGEL HINTEN DOSSERET SELLE

Color / Colore / Colour / Coleur / Farbe:

NEGRA "FRANCIA - EURO1" / NEGRO / BLACK / SCHWARZ / NOIR

Cod. Kod.	Denominación Denominazione Name	Bezeichnung Denomination
00H00404684	TAPA SUP. DEPSTO. NEGRO SUBCOMP.CARCASSA SUP.SERB. TOP TANK FRAME	TANKKLAPPE COUVERCLE DE RESERVOIR
00H00541694	SCTO.TAPA LAT.DR..C/C NEGRA SUBCOMP.COPERC.LAT.DES.C/C. RIGHT HAND SIDE COVER	SEITENDECKEL RECHTS PLAQUE LATERAL DROITE AVEC
00H00541704	SCTO.TAPA LAT.IZ..C/C NEGRA SUBCOMP.COP.LAT.SIN.C/C. LEFT HAND SIDE COVER	SEITENDECKEL- LINKS FLANC LAT.G.AVEC DECAL
00H00618014	CTO.SILLIN SENDA NEGRA COMP.SELLINO SEAT	SITZBANK SELLE
00H00708434	GUARDAB. DT. NEGRA PARAFANGO ANTERIORE FRONT MUDGUARD ASSY	KOTFLUGEL VORN GARDE-BOUE AVANT RGE
00H02229374	SCTO.CARC.FARO NEGRA SUBCOMP.CARC.FARO C/C. HEADLIGHT CUSING SUB-ASSEMBLY	SCHEINWERFERVERKLEIDUNG PLAQUE PHARE
00H04427804	SCTO. TAPA DT. DR. NEGRA SUBCOMP.COP.ANT.DES.C/C. FRONT LH ADORNMENT	SEITENTEIL OUIE MOTEUR D.
00H04427834	SCTO. TAPA DT. IZ. NEGRA SUBCOMP.COP.ANT.SIN.C/C FRONT RH ADORNMENT	KHULERVERKLEIDUNG OUIE MOTEUR G.
00H04912094	SCTO. COLIN C/C NEGRA COLIN SELLINO SEAT BASE	KOTFLUGEL HINTEN DOSSERET SELLE

Relación Piezas Diferenciadas por el Color
Lista Parti Coloranti
Color Combination Parts List
Farbcode
Liste des Piéces Similaires Codifiées par Coleur

Color / Colore / Colour / Coleur / Farbe:
VERDE "ESPAÑA" / VERDE / GREEN / GRÜN / VERT

Cod. Kod.	Denominación Denominazione Name	Bezeichnung Denomination
00H00414682	TAPA SUP. DEPSTO. VERDE SUBCOMP.CARCASSA SUP.SERB. TOP TANK FRAME	TANKKLAPPE COUVERCLE DE RESERVOIR
00H00541696	SCTO.TAPA LAT.DR..C/C VERDE SUBCOMP.COPERC.LAT.DES.C/C. RIGHT HAND SIDE COVER	SEITENDECKEL RECHTS PLAQUE LATERAL DROITE AVEC
00H00541706	SCTO.TAPA LAT.IZ..C/C VERDE SUBCOMP.COP.LAT.SIN.C/C. LEFT HAND SIDE COVER	SEITENDECKEL- LINKS FLANC LAT.G.AVEC DECAL
00H00618012	CTO.SILLIN SENDA VERDE COMP.SELLINO SEAT	SITZBANK SELLE
00H00708436	GUARDAB. DT. VERDE PARAFANGO ANTERIORE FRONT MUDGUARD ASSY	KOTFLUGEL VORN GARDE-BOUE AVANT RGE
00H02229376	SCTO.CARC.FARO VERDE SUBCOMP.CARC.FARO C/C. HEADLIGHT CUSING SUB-ASSEMBLY	SCHEINWERFERVERKLEIDUNG PLAQUE PHARE
00H04427806	SCTO. TAPA DT. DR. VERDE SUBCOMP.COP.ANT.DES.C/C. FRONT LH ADORNMENT	SEITENTEIL OUIE MOTEUR D.
00H04427836	SCTO. TAPA DT. IZ. VERDE SUBCOMP.COP.ANT.SIN.C/C FRONT RH ADORNMENT	KHULERVERKLEIDUNG OUIE MOTEUR G.
00H04912096	SCTO. COLIN C/C VERDE COLIN SELLINO SEAT BASE	KOTFLUGEL HINTEN DOSSERET SELLE

Color / Colore / Colour / Coleur / Farbe:
NEGRA "FRANCIA - EURO1" / NEGRO / BLACK / SCHWARZ / NOIR

Cod. Kod.	Denominación Denominazione Name	Bezeichnung Denomination
00H00404681	TAPA SUP. DEPSTO. VERDE SUBCOMP.CARCASSA SUP.SERB. TOP TANK FRAME	TANKKLAPPE COUVERCLE DE RESERVOIR
00H00541692	SCTO.TAPA LAT.DR..C/C VERDE SUBCOMP.COPERC.LAT.DES.C/C. RIGHT HAND SIDE COVER	SEITENDECKEL RECHTS PLAQUE LATERAL DROITE AVEC
00H00541702	SCTO.TAPA LAT.IZ..C/C VERDE SUBCOMP.COP.LAT.SIN.C/C. LEFT HAND SIDE COVER	SEITENDECKEL- LINKS FLANC LAT.G.AVEC DECAL
00H00618012	CTO.SILLIN SENDA VERDE COMP.SELLINO SEAT	SITZBANK SELLE
00H00708432	GUARDAB. DT. VERDE PARAFANGO ANTERIORE FRONT MUDGUARD ASSY	KOTFLUGEL VORN GARDE-BOUE AVANT RGE
00H02229372	SCTO.CARC.FARO VERDE SUBCOMP.CARC.FARO C/C. HEADLIGHT CUSING SUB-ASSEMBLY	SCHEINWERFERVERKLEIDUNG PLAQUE PHARE
00H04427802	SCTO. TAPA DT. DR. VERDE SUBCOMP.COP.ANT.DES.C/C. FRONT LH ADORNMENT	SEITENTEIL OUIE MOTEUR D.
00H04427832	SCTO. TAPA DT. IZ. VERDE SUBCOMP.COP.ANT.SIN.C/C FRONT RH ADORNMENT	KHULERVERKLEIDUNG OUIE MOTEUR G.
00H04912092	SCTO. COLIN C/C VERDE COLIN SELLINO SEAT BASE	KOTFLUGEL HINTEN DOSSERET SELLE

Relación Piezas Diferenciadas por el Color
Lista Parti Coloranti
Color Combination Parts List
Farbcode
Liste des Piéces Similaires Codifiées par Coleur

Color / Colore / Colour / Coleur / Farbe:
AZUL "ESPAÑA" / AZZURRA / BLUE / BLAU / BLEU

Cod. Kod.	Denominación Denominazione Name	Bezeichnung Denomination
00H00414684	TAPA SUP. DEPSTO. AZUL SUBCOMP.CARCASSA SUP.SERB. TOP TANK FRAME	TANKKLAPPE COUVERCLE DE RESERVOIR
00H00541709	SCTO.TAPA LAT.IZ..C/C AZUL SUBCOMP.COP.LAT.SIN.C/C. LEFT HAND SIDE COVER	SEITENDECKEL RECHTS PLAQUE LATERAL DROITE AVEC
00H00549701	SCTO.TAPA LAT.IZ..C/C AZUL SUBCOMP.COP.LAT.SIN.C/C. LEFT HAND SIDE COVER	SEITENDECKEL- LINKS FLANC LAT.G.AVEC DECAL
00H00618013	CTO.SILLIN SENDA AZUL COMP. SELLINO SEAT	SITZBANK SELLE
00H00708437	GUARDAB.DT. AZUL PARAFANGO ANTERIORE FRONT MUDGUARD ASSY	KOTFLUGEL VORN GARDE-BOUE AVANT RGE
00H02229377	SCTO.CARC.FARO AZUL SUBCOMP.CARC.FARO C/C. HEADLIGHT CUSING SUB-ASSEMBLY	SCHEINWERFERVERKLEIDUNG PLAQUE PHARE
00H04427807	SCTO. TAPA DT. DR. AZUL SUBCOMP.COP.ANT.DES.C/C. FRONT LH ADORNMENT	SEITENTEIL OUIE MOTEUR D.
00H04427837	SCTO. TAPA DT. IZ. AZUL SUBCOMP.COP.ANT.SIN.C/C FRONT RH ADORNMENT	KHULERVERKLEIDUNG OUIE MOTEUR G.
00H04922091	SCTO. COLIN C/C AZUL COLIN SELLINO SEAT BASE	KOTFLUGEL HINTEN DOSSERET SELLE

Color / Colore / Colour / Coleur / Farbe:
NEGRA "FRANCIA - EURO1" / NEGRO / BLACK / SCHWARZ / NOIR

Cod. Kod.	Denominación Denominazione Name	Bezeichnung Denomination
00H00414686	TAPA SUP. DEPSTO. AZUL SUBCOMP.CARCASSA SUP.SERB. TOP TANK FRAME	TANKKLAPPE COUVERCLE DE RESERVOIR
00H00541699	SCTO.TAPA LAT.DR..C/C AZUL SUBCOMP.COPERC.LAT.DES.C/C. RIGHT HAND SIDE COVER	SEITENDECKEL RECHTS PLAQUE LATERAL DROITE AVEC
00H00549691	SCTO.TAPA LAT.DR..C/C AZUL SUBCOMP.COPERC.LAT.DES.C/C. RIGHT HAND SIDE COVER	SEITENDECKEL- LINKS FLANC LAT.G.AVEC DECAL
00H00618013	CTO.SILLIN SENDA AZUL COMP. SELLINO SEAT	SITZBANK SELLE
00H00708433	GUARDAB.DT. AZUL PARAFANGO ANTERIORE FRONT MUDGUARD ASSY	KOTFLUGEL VORN GARDE-BOUE AVANT RGE
00H02229373	SCTO.CARC.FARO AZUL SUBCOMP.CARC.FARO C/C. HEADLIGHT CUSING SUB-ASSEMBLY	SCHEINWERFERVERKLEIDUNG PLAQUE PHARE
00H04427803	SCTO. TAPA DT. DR. AZUL SUBCOMP.COP.ANT.DES.C/C. FRONT LH ADORNMENT	SEITENTEIL OUIE MOTEUR D.
00H04427833	SCTO. TAPA DT. IZ. AZUL SUBCOMP.COP.ANT.SIN.C/C FRONT RH ADORNMENT	KHULERVERKLEIDUNG OUIE MOTEUR G.
00H04912099	SCTO. COLIN C/C AZUL COLIN SELLINO SEAT BASE	KOTFLUGEL HINTEN DOSSERET SELLE

Relación Piezas Diferenciadas por el Color
Lista Parti Coloranti
Color Combination Parts List
Farbcode
Liste des Piéces Similaires Codifiées par Coleur

Color / Colore / Colour / Coleur / Farbe:
ROJO "ESPAÑA" / ROSSO / RED / ROT / ROUGE

Cod. Kod.	Denominación Denominazione Name	Bezeichnung Denomination
00H00414683	TAPA SUP. DEPSTO. ROJO SUBCOMP.CARCASSA SUP.SERB. TOP TANK FRAME	TANKKLAPPE COUVERCLE DE RESERVOIR
00H00541695	SCTO.TAPA LAT.DR..C/C ROJO SUBCOMP.COPERC.LAT.DES.C/C. RIGHT HAND SIDE COVER	SEITENDECKEL RECHTS PLAQUE LATERAL DROITE AVEC
00H00541705	SCTO.TAPA LAT.IZ..C/C ROJO SUBCOMP.COP.LAT.SIN.C/C. LEFT HAND SIDE COVER	SEITENDECKEL- LINKS FLANC LAT.G.AVEC DECAL
00H00618015	CTO.SILLIN SENDA ROJO COMP. SELLINO SEAT	SITZBANK SELLE
00H00708435	GUARDAB. DT. ROJO PARAFANGO ANTERIORE FRONT MUDGUARD ASSY	KOTFLUGEL VORN GARDE-BOUE AVANT RGE
00H02229375	SCTO.CARC.FARO ROJO SUBCOMP.CARC.FARO C/C. HEADLIGHT CUSING SUB-ASSEMBLY	SCHEINWERFERVERKLEIDUNG PLAQUE PHARE
00H04427805	SCTO. TAPA DT. DR. ROJO SUBCOMP.COP.ANT.DES.C/C. FRONT LH ADORNMENT	SEITENTEIL OUIE MOTEUR D.
00H04427835	SCTO. TAPA DT. IZ. ROJO SUBCOMP.COP.ANT.SIN.C/C FRONT RH ADORNMENT	KHULERVERKLEIDUNG OUIE MOTEUR G.
00H04912095	SCTO. COLIN C/C ROJO COLIN SELLINO SEAT BASE	KOTFLUGEL HINTEN DOSSERET SELLE

Color / Colore / Colour / Coleur / Farbe:
NEGRA "FRANCIA - EURO1" / NEGRO / BLACK / SCHWARZ / NOIR

Cod. Kod.	Denominación Denominazione Name	Bezeichnung Denomination
00H00404681	TAPA SUP. DEPSTO. ROJO SUBCOMP.CARCASSA SUP.SERB. TOP TANK FRAME	TANKKLAPPE COUVERCLE DE RESERVOIR
00H00541691	SCTO.TAPA LAT.DR..C/C ROJO SUBCOMP.COPERC.LAT.DES.C/C. RIGHT HAND SIDE COVER	SEITENDECKEL RECHTS PLAQUE LATERAL DROITE AVEC
00H00541701	SCTO.TAPA LAT.IZ..C/C ROJO SUBCOMP.COP.LAT.SIN.C/C. LEFT HAND SIDE COVER	SEITENDECKEL- LINKS FLANC LAT.G.AVEC DECAL
00H00618011	CTO.SILLIN SENDA ROJO COMP. SELLINO SEAT	SITZBANK SELLE
00H00708431	GUARDAB. DT. ROJO PARAFANGO ANTERIORE FRONT MUDGUARD ASSY	KOTFLUGEL VORN GARDE-BOUE AVANT RGE
00H02229371	SCTO.CARC.FARO ROJO SUBCOMP.CARC.FARO C/C. HEADLIGHT CUSING SUB-ASSEMBLY	SCHEINWERFERVERKLEIDUNG PLAQUE PHARE
00H04427801	SCTO. TAPA DT. DR. ROJO SUBCOMP.COP.ANT.DES.C/C. FRONT LH ADORNMENT	SEITENTEIL OUIE MOTEUR D.
00H04427831	SCTO. TAPA DT. IZ. ROJO SUBCOMP.COP.ANT.SIN.C/C FRONT RH ADORNMENT	KHULERVERKLEIDUNG OUIE MOTEUR G.
00H04912091	SCTO. COLIN C/C ROJO COLIN SELLINO SEAT BASE	KOTFLUGEL HINTEN DOSSERET SELLE

LAMINA / STAMPA / DIAGRAM / BILD / FEUILLE - 1

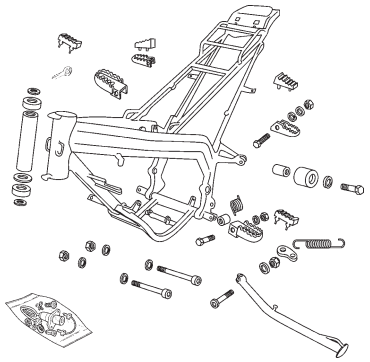

LAMINA / STAMPA / DIAGRAM / BILD / FEUILLE - 2

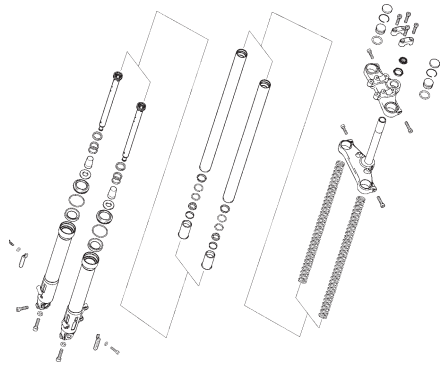

LAMINA / STAMPA / DIAGRAM / BILD / FEUILLE - 3

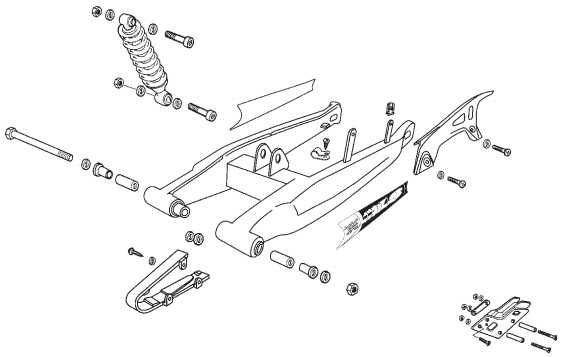

LAMINA / STAMPA / DIAGRAM / BILD / FEUILLE - 4

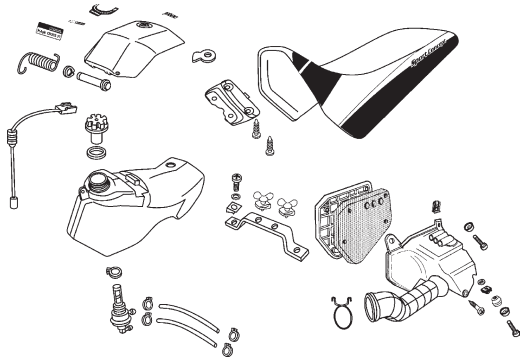

LAMINA / STAMPA / DIAGRAM / BILD / FEUILLE - 5

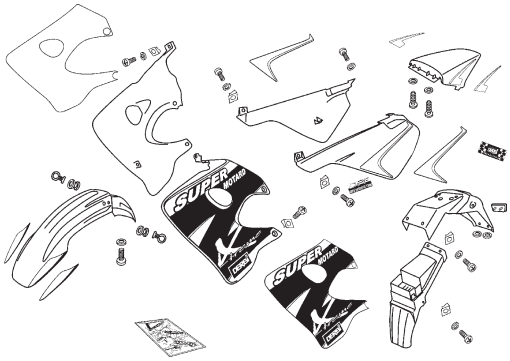

LAMINA / STAMPA / DIAGRAM / BILD / FEUILLE - 6

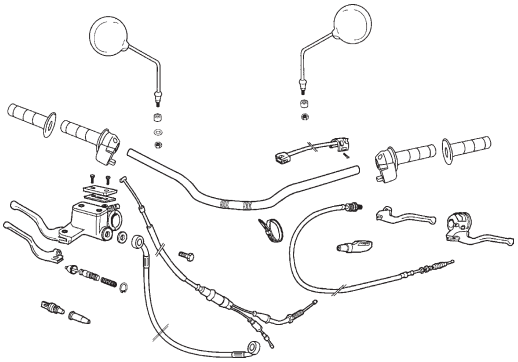

LAMINA / STAMPA / DIAGRAM / BILD / FEUILLE - 7

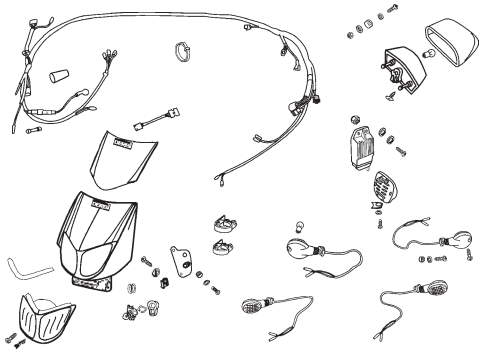

LAMINA / STAMPA / DIAGRAM / BILD / FEUILLE - 8

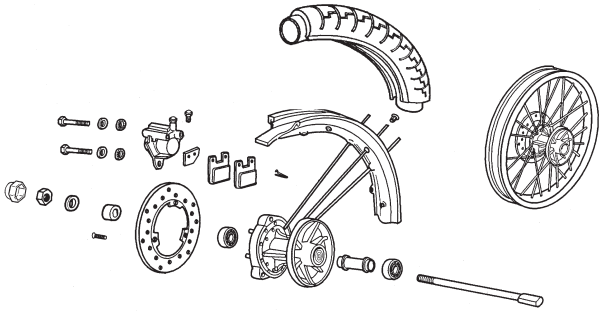

LAMINA / STAMPA / DIAGRAM / BILD / FEUILLE - 9

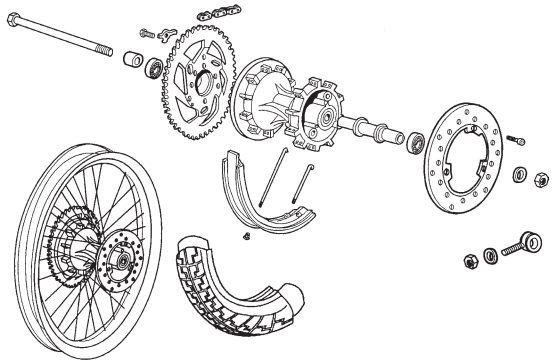

LAMINA / STAMPA / DIAGRAM / BILD / FEUILLE - 10

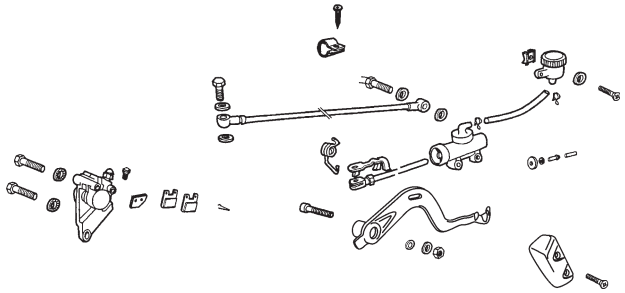

LAMINA / STAMPA / DIAGRAM / BILD / FEUILLE - 11

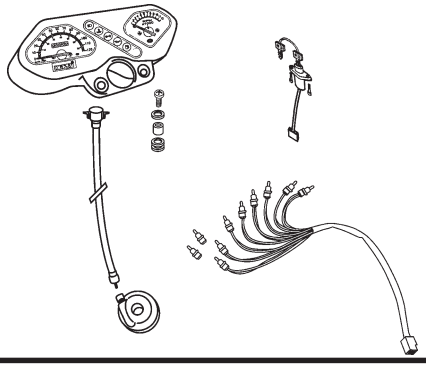

LAMINA / STAMPA / DIAGRAM / BILD / FEUILLE - 12

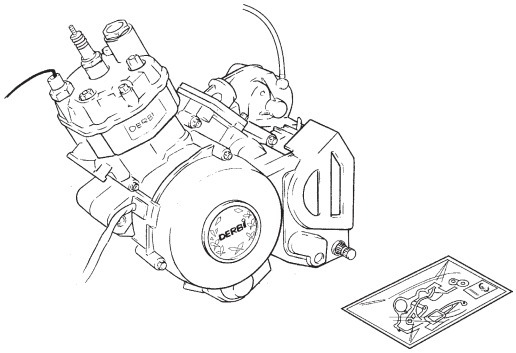

LAMINA / STAMPA / DIAGRAM / BILD / FEUILLE - 13

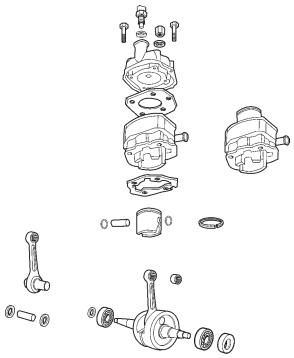

LAMINA / STAMPA / DIAGRAM / BILD / FEUILLE - 14

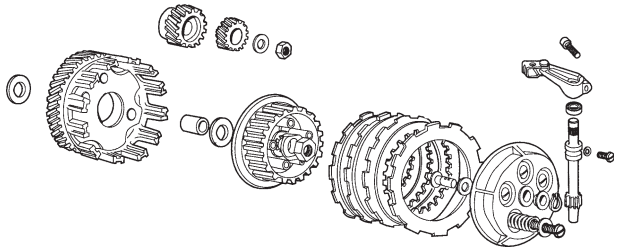

LAMINA / STAMPA / DIAGRAM / BILD / FEUILLE - 15

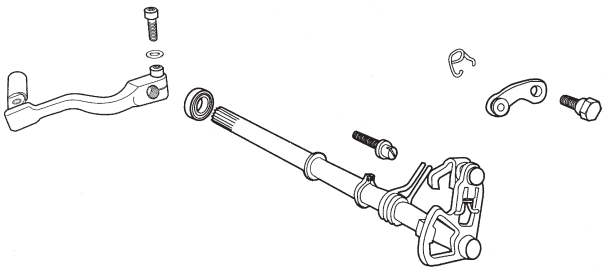

LAMINA / STAMPA / DIAGRAM / BILD / FEUILLE - 16

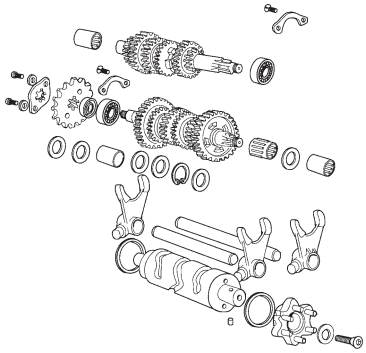

LAMINA / STAMPA / DIAGRAM / BILD / FEUILLE - 17

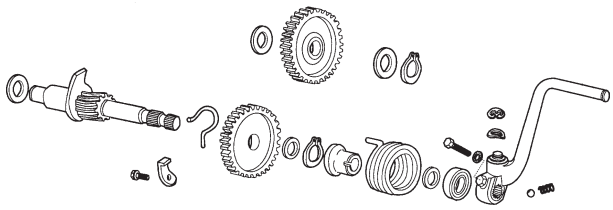

LAMINA / STAMPA / DIAGRAM / BILD / FEUILLE - 18

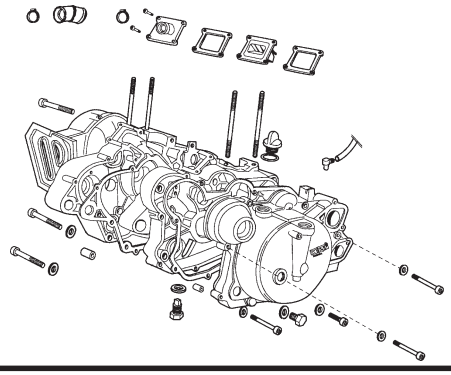

LAMINA / STAMPA / DIAGRAM / BILD / FEUILLE - 19

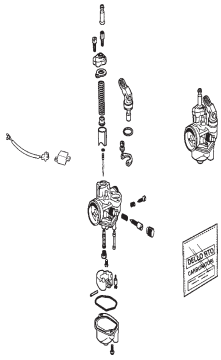

LAMINA / STAMPA / DIAGRAM / BILD / FEUILLE - 20

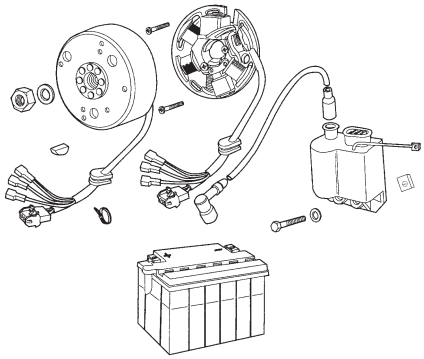

LAMINA / STAMPA / DIAGRAM / BILD / FEUILLE - 21

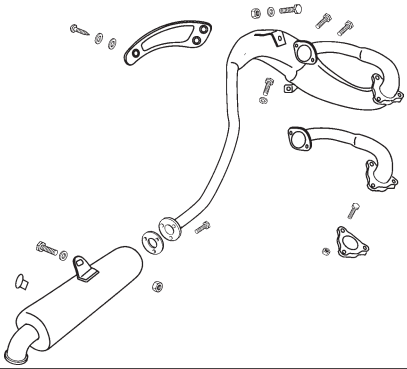

LAMINA / STAMPA / DIAGRAM / BILD / FEUILLE - 22

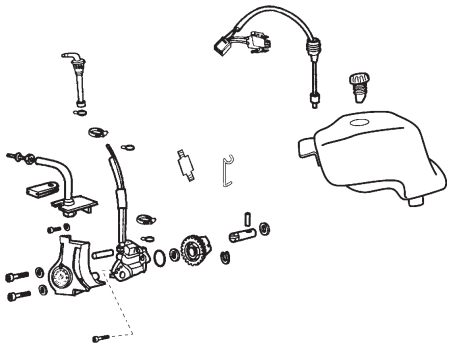

LAMINA / STAMPA / DIAGRAM / BILD / FEUILLE - 23

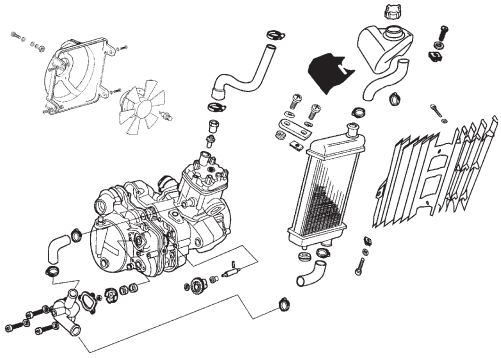

LAMINA / STAMPA / DIAGRAM / BILD / FEUILLE - 24

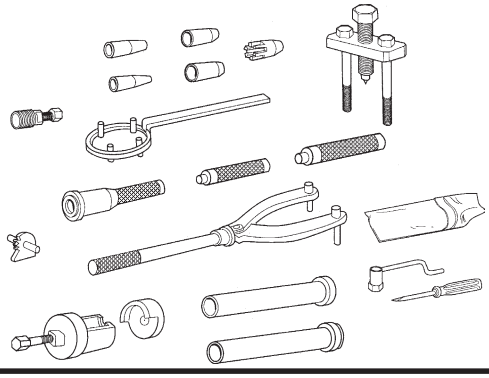

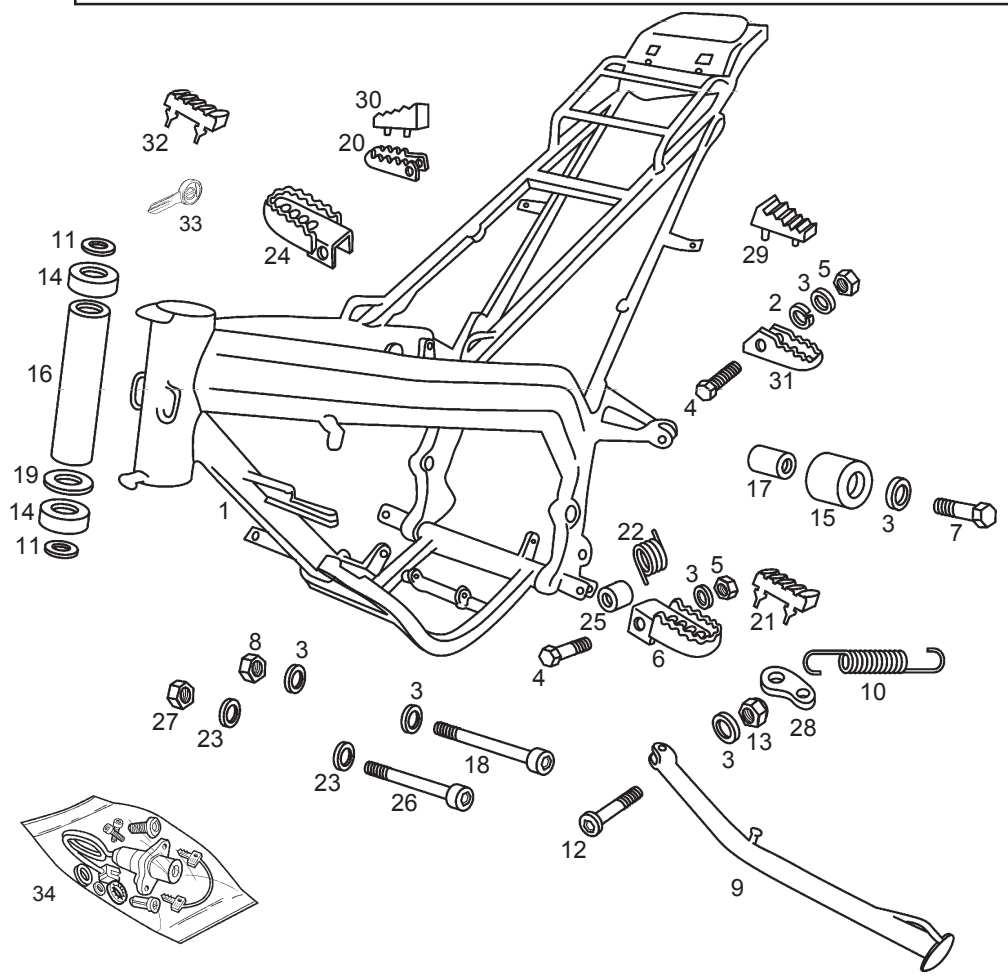

Fig.	Ver.	COD. KOD.	DESCRIPCIÓN DENOMINAZIONE NAME	BEZEICHNUNG DESIGNATION	MOD.	NOTAS NOTES NOTA MITSCHRIFT NOTES
01A		00H01961601	R-CTO. CUADRO C/RDMTOS. COMP. TELAIO FRAME	RAHMEN SOUS ENSEMBLE CADRE	1 2 3 4 5 6 7 8 9 A B C D E F G H I J K L M N O	
02A		00036008000	ARANDELA MUELLE B8 D-137 RONDELLA ENTRETOISE 8,4	SHEIBE D8,4 RONDELLE D8,4	1 2 3 4 5 6 7 8 9 A B C D E F G H I J K L M N O	
03A		00402080001	ARAND.PLANA MECANIZ.D.8.DIN125 RONDELLA PIATTA D8 MACHINED FLAT WASHER D8 DIN-12	SCHEIBE ROND. PLATE MECANISEE	1 2 3 4 5 6 7 8 9 A B C D E F G H I J K L M N O	
04A		00022084021	TOR. C/EXAG. 8M125X40 8.8/D-931 HEX. VITE TESTA ESAGONALE 8 X 40 HEAD SCREW 8 X 40	INBUSSCHRAUBE VIS T. CREUSE	1 2 3 4 5 6 7 8 9 A B C D E F G H I J K L M N O	
05A		00023108000	TCA.AUTOBLOC. 8M125.DIN-985.8 DADO AUTOBLOCCANTE 8M125 SELF-LOCKING NUT M8	MUTTER SELBSTS ECROU INDESSERABLE 8M125.DI	1 2 3 4 5 6 7 8 9 A B C D E F G H I J K L M N O	
06A		00H02201312	SCTO.ESTR.IZ PILOTO ZINC.BL. APPOG.DES. FOOTREST	FUSSRASTER LINKS REPOSE PIED GAUCHE	1 2 3 4 5 6 7 8 9 A B C D E F G H I J K L M N O	
07A		00022084521	TOR.C/EXAG. 8M125X45.DIN- HEX. VITE TESTA ESAGONALE 8M125X45. HEAD SCREW 8M125X45	INBUSSCHRAUBE VIS T. CREUSE	1 2 3 4 5 6 7 8 9 A B C D E F G H I J K L M N O	
08A		00262080022	TCA.AUTOBLOC. 8M125.DIN-985.10 DADO AUTOBLOCCANTE 8M125.DIN-9 SELF-LOCKING NUT 8M125	MUTTER SELBSTS8M125 ECROU INDESSERABLE	1 2 3 4 5 6 7 8 9 A B C D E F G H I J K L M N O	
09A		00H00820011	SCTO. PATA CABALLETE SUBCOMPLESSO ZAMPA CAVALETTO SIDE STAN SUB-ASSY	SEITENSTANDER BEQUILLE LATERALE	1 2 3 4 5 6 7 8 9 A B C D E F G H I J K L M N O	
10A		00H00803082	MUELLE PATA CABALL.GPR-50 ”R” MOLLA ZAMPA CAVALLETTO SIDE STAND SPRING	FEDER GESTELLFUSS AUSSEN RESSORT DE BEQUILLE	1 2 3 4 5 6 7 8 9 A B C D E F G H I J K L M N O	

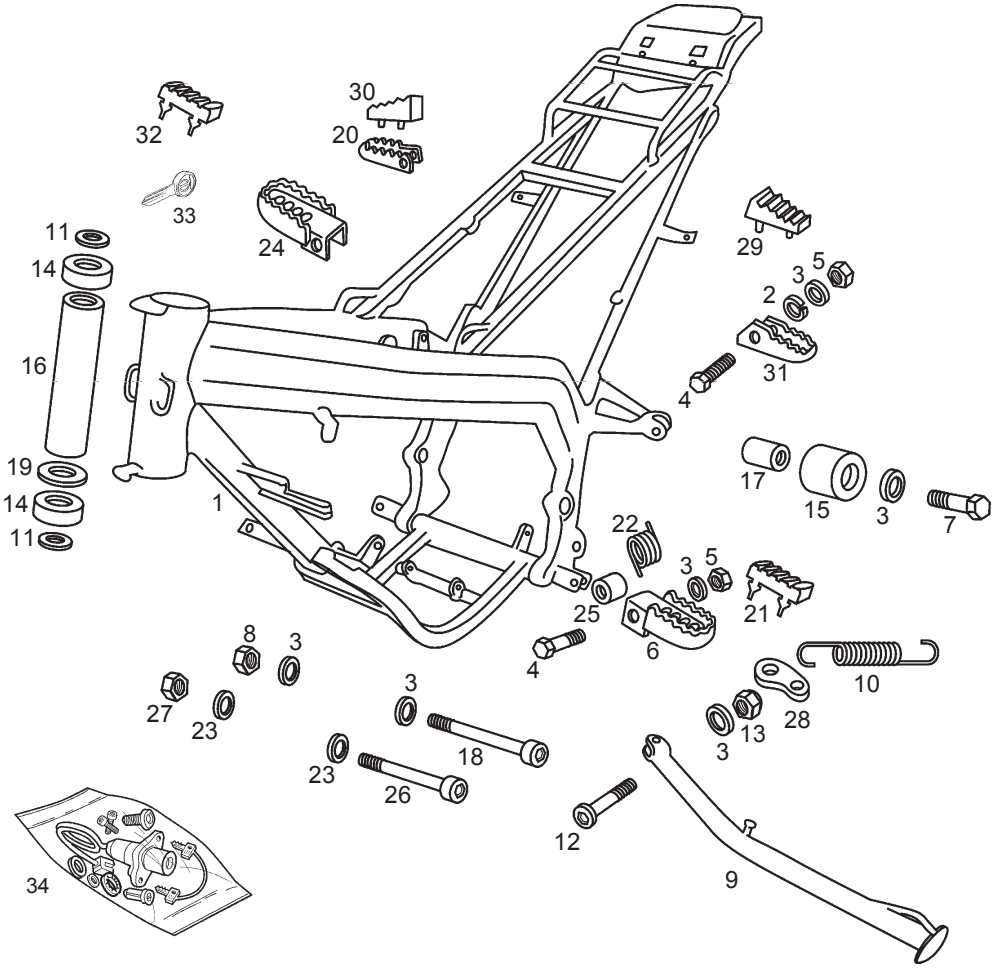

Fig.	Ver.	COD. KOD.	DESCRIPCIÓN DENOMINAZIONE NAME	BEZEICHNUNG DESIGNATION	MOD.	NOTAS NOTES NOTA MITSCHRIFT NOTES
11A		00008902630	ARAND.TAPON TUBO PNA.COYOTE. RONDELLA TAPPO FORCELLA WASHER, FORK TUBE CAP	DICHTRING RONDELLE	1 2 3 4 5 6 7 8 9 A B C D E F G H I J K L M N O	
12A		00H00805072	TOR. FIJ. PATA CABALL. VITE FISSAGGIO ZAMPA CAVALLET SIDE STAND LEG SECURING SCREW	BEFESTIGUNGSSCHARAUBE STND. VIS FIXATION BEQUILLE	1 2 3 4 5 6 7 8 9 A B C D E F G H I J K L M N O	
13A		00232080021	TCA.EXAG. 8M125. DIN-934. DADO ESAGONALE 8M125.D-934 HEXAGON NUT 8M125 D934	MUTTER 8M125 ECROU HEXAGONAL 8M125. DIN-	1 2 3 4 5 6 7 8 9 A B C D E F G H I J K L M N O	
14A		00000056205	COJINETE.SKF6205.25.52.15.2RS CUSCINETTO BEARING SKF.6205.25.52.15	LAGER SKF.6205.25.52 .15 COUSSINET SKF. 6205. 25. 52	1 2 3 4 5 6 7 8 9 A B C D E F G H I J K L M N O	
15A		00H01801771	RODILLO TENSOR CADENA RULLO TENSORE CATENA CHAIN SUPPORTY GUIDE	ROLLE ROULETTE GUIDE CHAINE	1 2 3 4 5 6 7 8 9 A B C D E F G H I J K L M N O	
16A		00H06301401	TUBO SEP.RDMTO.DIRECC. TUBO SEPARAZIONE CUSCINETTO ST STEERING BEARING SEPARATOR TUB	DISTANZROHR LENKUNGSLAGER TUBE SEPARATION ROULEMENT D	1 2 3 4 5 6 7 8 9 A B C D E F G H I J K L M N O	
17A		00002518790	CASQ.GUIA CAD.C4/C7/RD/FD/FDS. GHIERA GUIDA CATENA C4/C7/RD/F SOCKET CHAIN GUIDE	DISTANZ ENTRETOISE GUIDE CHAINE	1 2 3 4 5 6 7 8 9 A B C D E F G H I J K L M N O	
18A		00H02500272	TOR.FIJ.INF.MOTOR.ALL.8M125X90 VITE FISSAGGIO INFERIORE MOTOR BOLT, CRANKCASE 8MM1.25X90.	INBUSSCHRAUBE MOTORBEFEST. VIS FIXATION MOTEUR M8	1 2 3 4 5 6 7 8 9 A B C D E F G H I J K L M N O	
19A		00H06500451	ARAND.COJIN.TUBO DIREC. RONDELLA BRONZINA TUBO STERZO STEERING TUBE BEARING WASHER G	STEERING TUBE BEARING WASHER G RONDELLE COUSSINET TUBE DIRECT	1 2 3 4 5 6 7 8 9 A B C D E F G H I J K L M N O	
20A		00D01520096	ESTRIB. DR. PASAJ. ZIRC. PEDANA DESTRA RIGHT FOOT REST	FUSSRASTER RECHTS REPOSE-PIED DROIT	1 2 3 4 5 6 7 8 9 A B C D E F G H I J K L M N O	

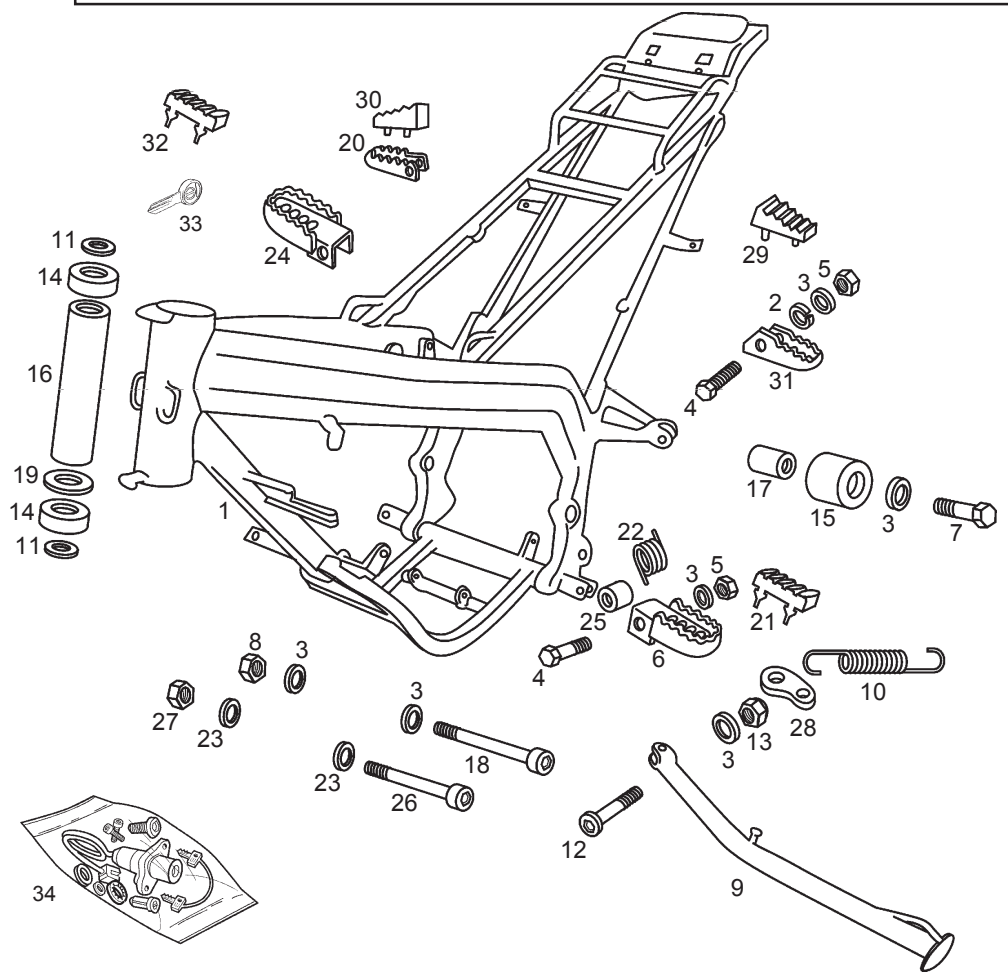

Fig.	Ver.	COD. KOD.	DESCRIPCIÓN DENOMINAZIONE NAME	BEZEICHNUNG DESIGNATION	MOD.	NOTAS NOTES NOTA MITSCHRIFT NOTES
21A		00H01501501	PROTECT.IZ.ESTRIB.PILOTO PROTEZIONE STAFFA SINISTRA LEFT FOOT REST PROTECTOR	FUSSRASTER LINKS REPOSE-PIED GAUCHE	1 2 3 4 5 6 7 8 9 A B C D E F G H I J K L M N O	
22A		00H04903292	MUELLE FIJACION ESTRIBERA MOLLA FISSAGGIO PREDELLINO PILLION FOOTREST SECURING	FEDER RESSORT	1 2 3 4 5 6 7 8 9 A B C D E F G H I J K L M N O	
23A		00402100001	ARAND.PLANA D.10.D125 RONDELLA PIATTA D.10 MACHINED FLAT WASHER D.10	SCHEIBE D.10 RONDELLE PLATE MECANISEE D.	1 2 3 4 5 6 7 8 9 A B C D E F G H I J K L M N O	
24A		00H02201302	SCTO.ESTRIB.PILOTO ZINC.BL. APPOG.DES. FOOTREST	FUSSRASTER RECHTS REPOSE PIED DROIT	1 2 3 4 5 6 7 8 9 A B C D E F G H I J K L M N O	
25A		00002215152	CASQUILLO FIJ. ESTRIBERA GIUNTO SEAL	DICHTRING JOINT	1 2 3 4 5 6 7 8 9 A B C D E F G H I J K L M N O	
26A		00H03000272	TOR.FIJ.DT.MTO.ALL.10M150X100 VITE FISSAGGIO ANTERIORE MOTOR SCREW	INBUSSCHRAUBE MOTOR BEFEST VIS	1 2 3 4 5 6 7 8 9 A B C D E F G H I J K L M N O	
27A		00262100032	TCA.AUTOBLOC.10M150.DIN-985.10 DADO AUTOBLOCC.10M150.DIN-985. SELF-LOCKING NUT 10M150	MUTTER SELBSTS 10M150 ECROU INDESSERABLE	1 2 3 4 5 6 7 8 9 A B C D E F G H I J K L M N O	
28A		00H00800422	PLACA RETORNO CABALLETE GPR-75 PIASTRINA RITORNO CAVALLETTO G SPRING KIK-STAND SUPPORT	PLATTE F. GESTELLRUCKFUHRU SUPPORT RESSORT DE BEQUILLE	1 2 3 4 5 6 7 8 9 A B C D E F G H I J K L M N O	
29A		00H01502501	PROTECTOR ESTRIBERA IZ. PROTEZIONE STAFFA SINISTRA FDS LEFT FOOT REST PROTECTOR	RASTER GUMMI LINKS PROTECTEUR REPOSE-PIED GAUC	1 2 3 4 5 6 7 8 9 A B C D E F G H I J K L M N O	
30A		00H01503101	PROTECTOR ESTRIBERA DR. PROTEZIONE STAFFA DESTRA RIGHT FOOT REST PROTECTOR	RASTER GUMMI RECHTS PROTECTEUR REPOSE-PIED DROI	1 2 3 4 5 6 7 8 9 A B C D E F G H I J K L M N O	

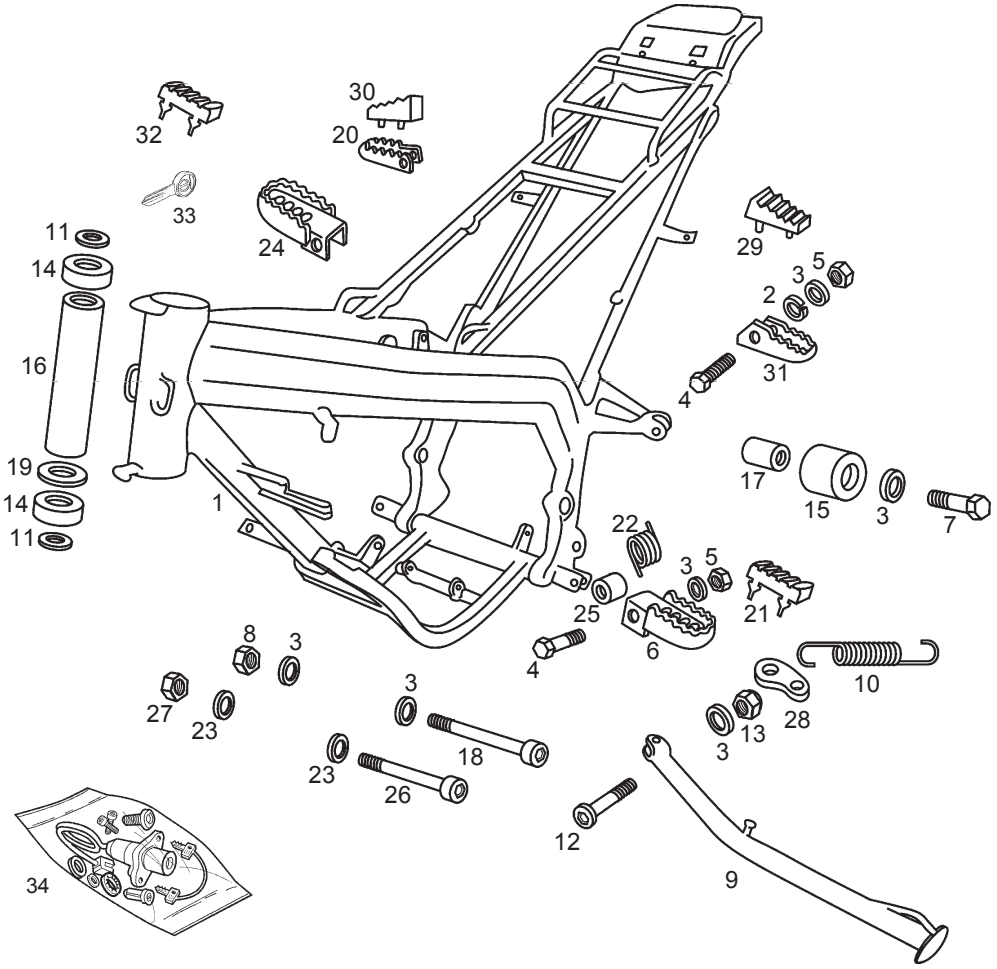

Fig.	Ver.	COD. KOD.	DESCRIPCIÓN DENOMINAZIONE NAME	BEZEICHNUNG DESIGNATION	MOD.	NOTAS NOTES NOTA MITSCHRIFT NOTES
31A		00D01540456	ESTRIBERA IZ. PASAJERO PEDANA SINISTRA LEFT FOOT REST	FUSSRASTER LINKS REPOSE-PIED GAUCHE	1 2 3 4 5 6 7 8 9 A B C D E F G H I J K L M N O	
32A		00H01502101	ESTRIBERA DR. PASAJERO PROTEZIONE STAFFA DESTRA RIGHT FOOT REST PROTECTOR	RASTER GUMMI RECHTS PROTECTEUR REPOSE-PIED DROI	1 2 3 4 5 6 7 8 9 A B C D E F G H I J K L M N O	

ACCESORIOS OPCIONALES / ACCESORI OPCIONALE / OPTIONAL ACCESORIES / WERKZEUG / OTILS FOURNIS

33A	00F01811411	R-LLAVE CERRADURAS.P/MEC. CHIAVE LOCK KEYS	SCHLUSSEL CLEF	1 2 3 4 5 6 7 8 9 A B C D E F G H I J K L M N O	
34A	00H04603871	CTO.CERRADURAS SERRATURE LOCK WITH KEYS	SCHLOOS-SATZ ENS.KIT SERRURES	1 2 3 4 5 6 7 8 9 A B C D E F G H I J K L M N O	

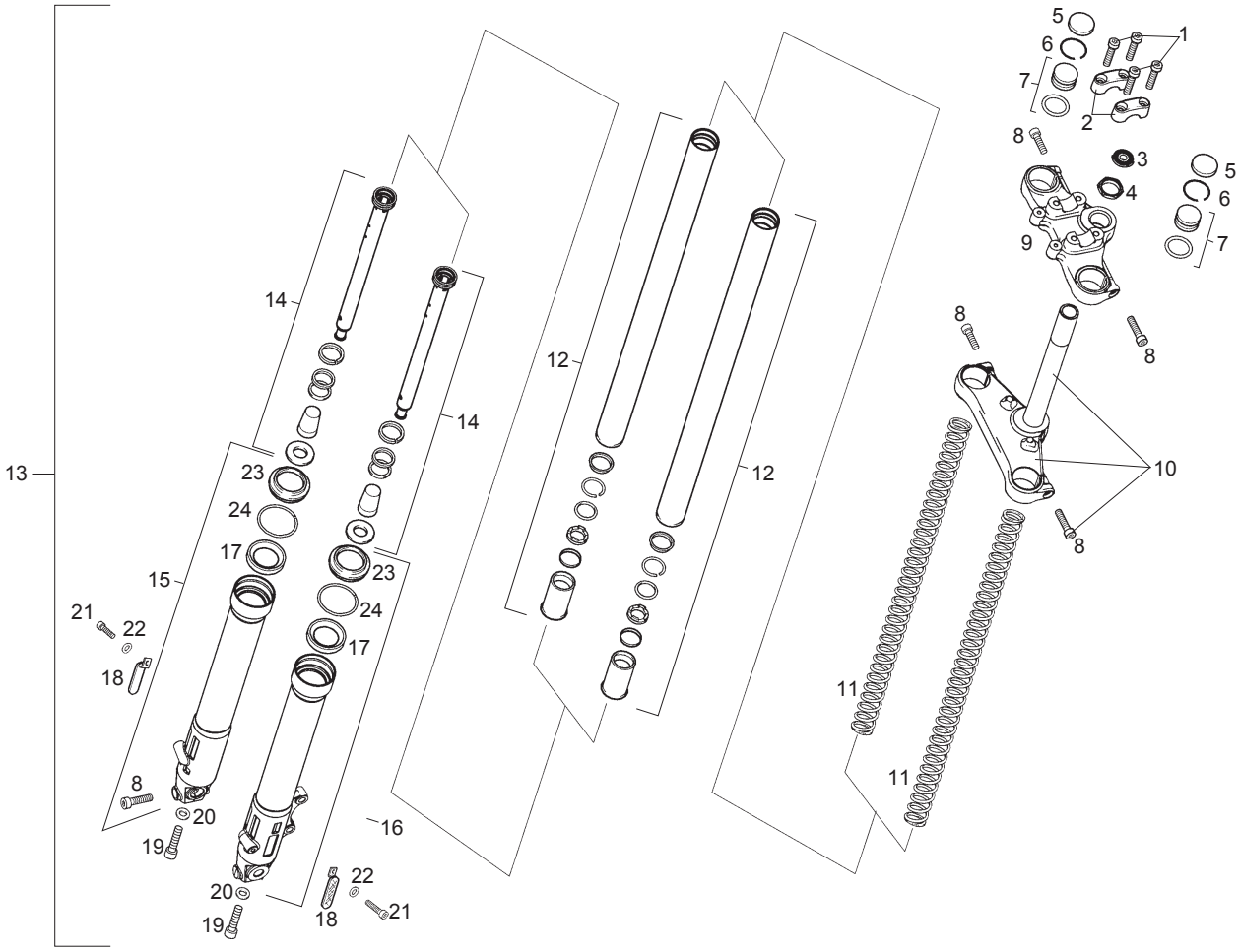

Fig.	Ver.	COD. KOD.	DESCRIPCIÓN DENOMINAZIONE NAME	BEZEICHNUNG DESIGNATION	MOD.	NOTAS NOTES NOTA MITSCHRIFT NOTES
01A		00000004840	TOR.C/ALLEN M8X40 VITE ALLEN M8X40 HEX.SOCRET-HEAD SCREW M8X40	INBUSSCHRAUBE M8X40 BOULON TETE HEX. M8X40	1 2 3 4 5 6 7 8 9 A B C D E F G H I J K L M N O	
02A		00H00203741	R-BRIDA FIJ. MANILLAR FLANGIA CLAMP	BEF.-SCHELLE ENTRETOISE	1 2 3 4 5 6 7 8 9 A B C D E F G H I J K L M N O	
03A		00H00202761	R-GUARDAPOLVO DIRECCION PARAPOLVERE SUPL.DUSTGUARD	STAUBFANGER POUSSIERE	1 2 3 4 5 6 7 8 9 A B C D E F G H I J K L M N O	
04A		00H00204601	R-ARANDELA TOPE MUELLE HORQ. ROINDELLA WASHER	SHEIBE RONDELLE	1 2 3 4 5 6 7 8 9 A B C D E F G H I J K L M N O	
05A		00H02003541	R-TAPA TAPON TUBO PIERNA TAPPO RESERVOIR	STOPFEN BOUCHON	1 2 3 4 5 6 7 8 9 A B C D E F G H I J K L M N O	
06A		00H00202501	R-ANILLO TORICO TAPON TUBO PNA. ANELLO TORICO O-RING	O-RING JOINT DE JAUGE	1 2 3 4 5 6 7 8 9 A B C D E F G H I J K L M N O	
07A		00H00205271	R-CTO. TAPON PNA. HORQ. TAPPO GAMBA FORCELLA FORK TUBE CAP	PFROPFEN F. GABELSCHENKEL BOUCHON	1 2 3 4 5 6 7 8 9 A B C D E F G H I J K L M N O	
08A		00004383500	TORNILLO M10X35 VITE M10X35 SCREW M10X35	SCHRAUBE M10X35 VIS TARAUD	1 2 3 4 5 6 7 8 9 A B C D E F G H I J K L M N O	
09A		00H00213091	R-PLATINA SUPERIOR FLANGIA SUP. FORCELLA HANDLEBAR LOCK CLAMP	BUGEL ETRIER FIX. GUIDON	1 2 3 4 5 6 7 8 9 A B C D E F G H I J K L M N O	
10A		00H00211011	R-CTO. TIJA PLATINA FUSTO PIASTRA LOWER TRIPLE CLAMP	SATTELSTANGE PLATINE INF. AVEC PIVOT	1 2 3 4 5 6 7 8 9 A B C D E F G H I J K L M N O	
11A		00H00210171	R-MUELLE HORQUILLA MOLLA FORCELLA FORK SPRING	GABELFEDER RESSORT DE FOURCHE	1 2 3 4 5 6 7 8 9 A B C D E F G H I J K L M N O	

HORQUILLA DIRECTRIZ
FORCELLA ANTERIORE
FORK ASSY

GABEL
FOURCHE AVANT

Lámina
Stampa
Diagram
Bild
Feuille
2

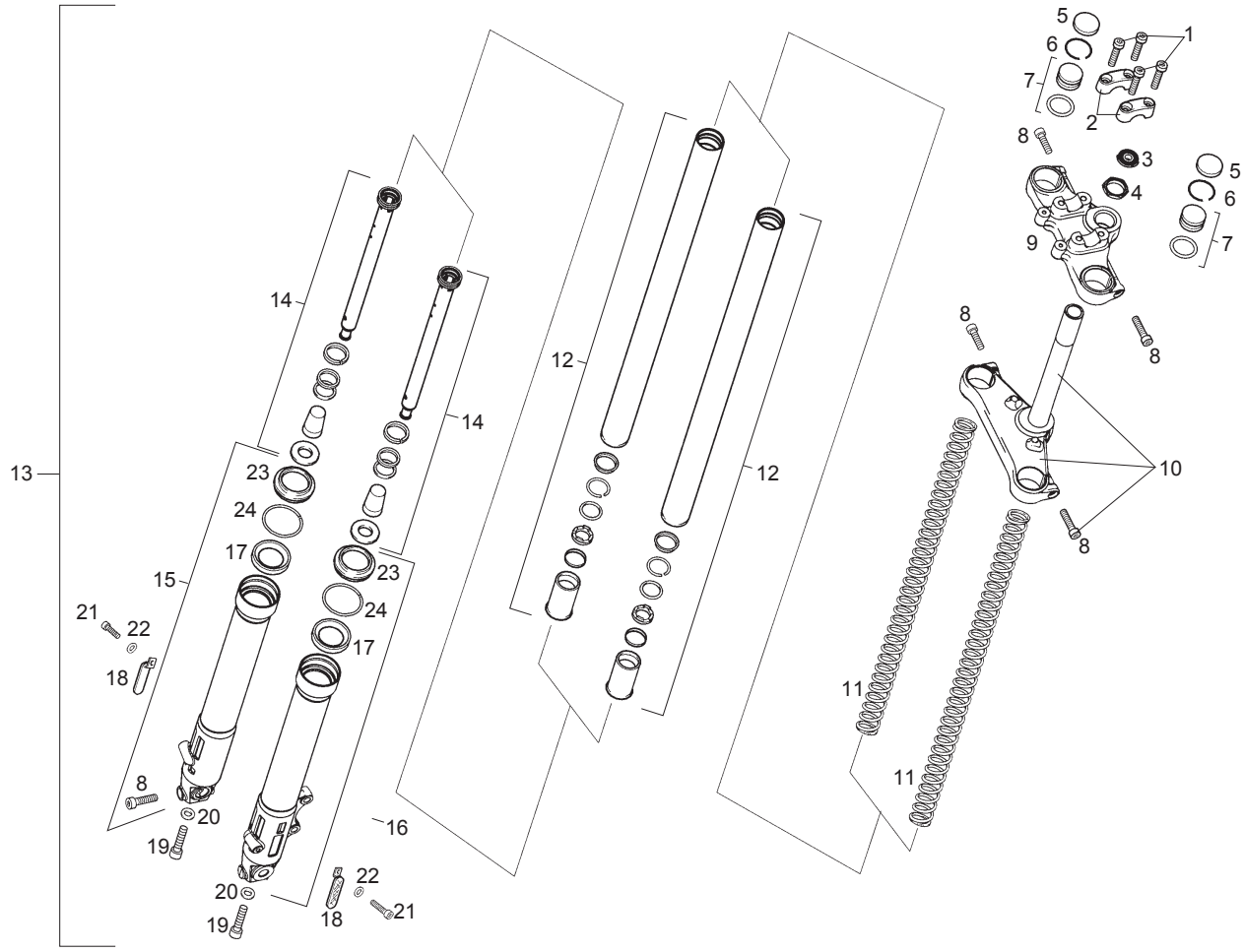

Fig.	Ver.	COD. KOD.	DESCRIPCIÓN DENOMINAZIONE NAME	BEZEICHNUNG DESIGNATION	MOD.	NOTAS NOTES NOTA MITSCHRIFT NOTES
12A		00H02003871	R-CTO. BARRA HORQUILLA BARRA GAMBA FORCELLA FORK BAR	GABELSTANKE BARRE DE FOURCHE	1 2 3 4 5 6 7 8 9 A B C D E F G H I J K L M N O	
13A		00H00227001	CTO. HORQUILLA DIRECTRIZ FORCELLA DIRETT FORK ASSY	LENKGABEL FOURCHE DIRITICE	1 2 3 4 5 6 7 8 9 A B C D E F G H I J K L M N O	
14A		00H00202531	R-CTO. TUBO HIDRAULICO TUBO IDRAULICO DAMPER TUBE	HYDRAULIKROHR TUBE HYDRAULIQUE	1 2 3 4 5 6 7 8 9 A B C D E F G H I J K L M N O	
15A		00H02011031	R-PIERNA HORQUILLA DR. GAMBA FORCELLA SI. RH. FORK TUBE LOWER	PFROPFEN F. GABELSCHENKEL RE. BOUCHON DROITE	1 2 3 4 5 6 7 8 9 A B C D E F G H I J K L M N O	
16A		00H02011041	R-PIERNA HORQUILLA IZ. GAMBA FORCELLA DE. LH. FORK TUBE LOWER	PFROPFEN F. GABELSCHENKEL LI. BOUCHON GAUCHE	1 2 3 4 5 6 7 8 9 A B C D E F G H I J K L M N O	
17A		00H00204471	R-RETEN PIERNA HORQ. GIUNTA SEAL	DICHTRING JOINT	1 2 3 4 5 6 7 8 9 A B C D E F G H I J K L M N O	
18A		00H01802081	CAPTAFAROS CATARIFRANGENTE REFLECTOR	TRAHLER CATADIOPTRE	1 2 3 4 5 6 7 8 9 A B C D E F G H I J K L M N O	
19A		00004013500	TORNILLO M10X35 VITE M10X35 SCREW M10X35	SCHRAUBE M10X35 VIS TARAUD	1 2 3 4 5 6 7 8 9 A B C D E F G H I J K L M N O	
20A		00000031100	ARANDELA PLANA D.10 RONDELLA WASHER	SCHEIBE RONDELLE	1 2 3 4 5 6 7 8 9 A B C D E F G H I J K L M N O	
21A		00008061500	TOR C/RED ALLEN 6M100X16 VITE TESTA ALLEN 6M 100X16 ALLEN SCREN 6M100X16	INBUSSCHRAUBE 6M100X16 VIS ALLEN 6M100X16	1 2 3 4 5 6 7 8 9 A B C D E F G H I J K L M N O	
22A		00031106000	ARANDELA PLANA D6 RONDELLA PIATTA D6 MACINED FLAT WASHER D6	SCHEIBE D.6 ROND.PLATE MECANISEE D6	1 2 3 4 5 6 7 8 9 A B C D E F G H I J K L M N O	

HORQUILLA DIRECTRIZ
FORCELLA ANTERIORE
FORK ASSY

GABEL
FOURCHE AVANT

Lámina
Stampa
Diagram
Bild
Feuille
2

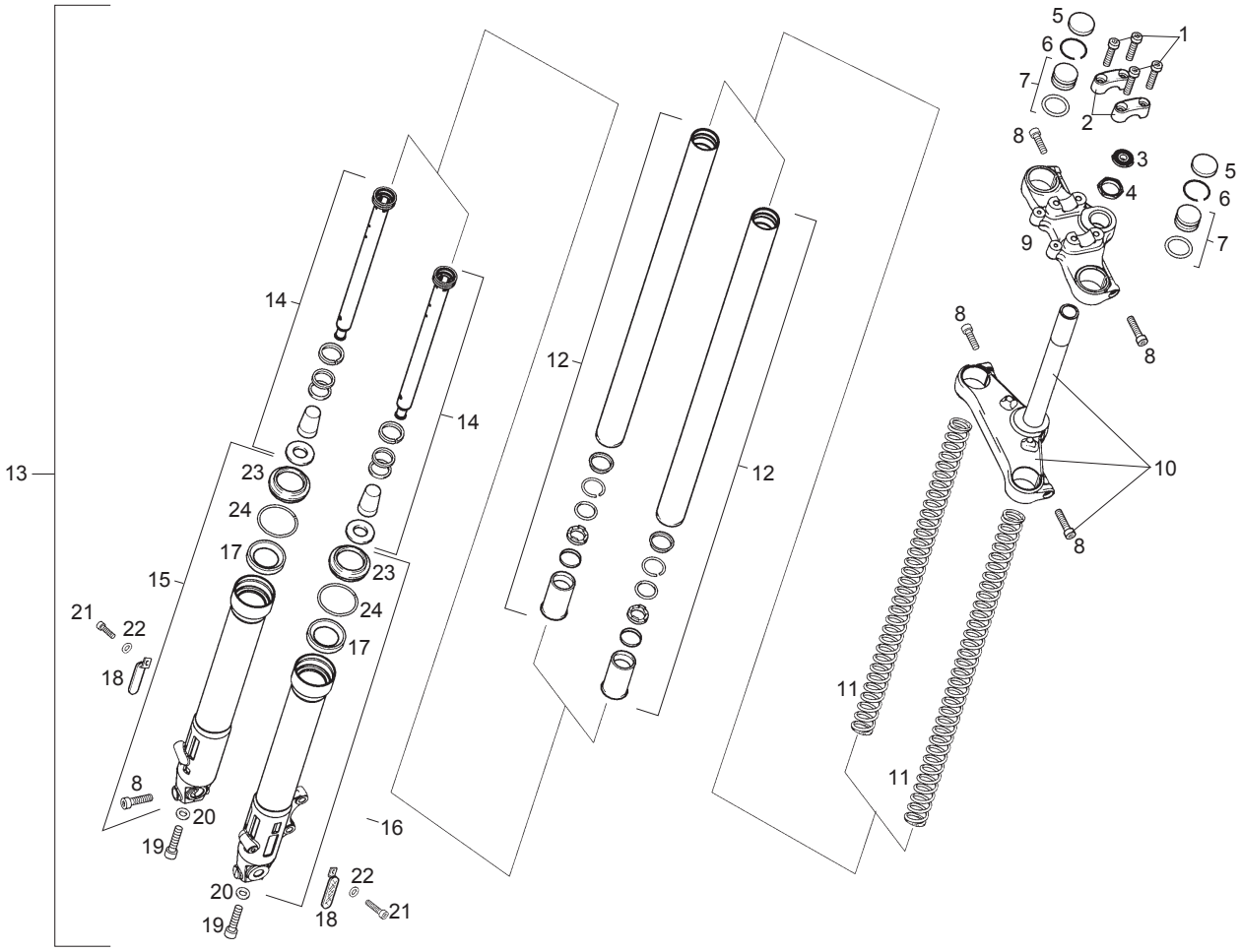

Fig.	Ver.	COD. KOD.	DESCRIPCIÓN DENOMINAZIONE NAME	BEZEICHNUNG DESIGNATION	MOD.	NOTAS NOTES NOTA MITSCHRIFT NOTES
23A		00H00204231	R-GUARDAP.PNA.HORQ.949421044 PARAPOLVERE DUSTGUARD	STAUBFANGER POUSSIERE	1 2 3 4 5 6 7 8 9 A B C D E F G H I J K L M N O	
24A		00H00201701	R-ANILLO RET.ACTE.949424012 ANELLO TORICO O-RING	O-RING JOINT DE JAUGE	1 2 3 4 5 6 7 8 9 A B C D E F G H I J K L M N O	

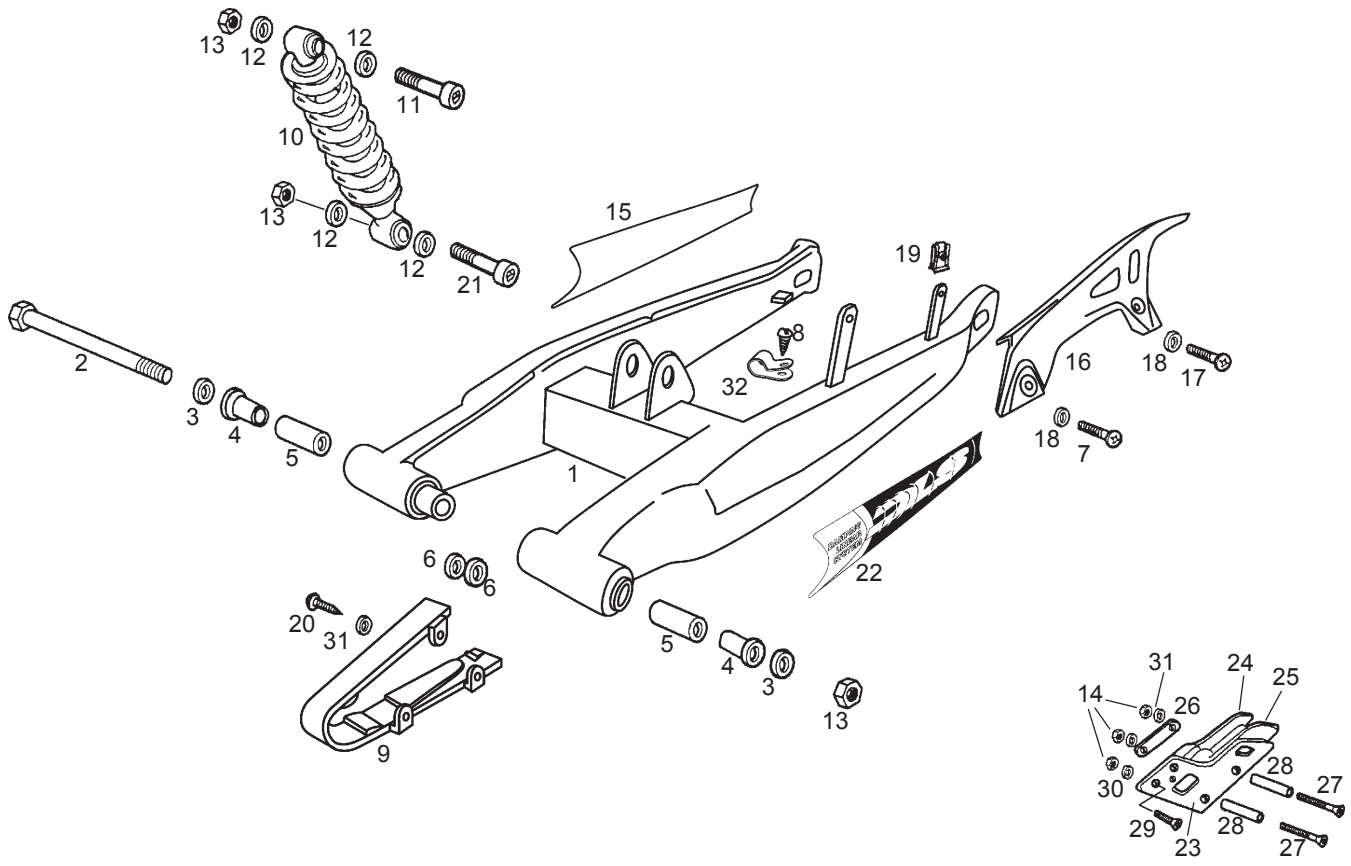

Fig.	Ver.	COD. KOD.	DESCRIPCIÓN DENOMINAZIONE NAME	BEZEICHNUNG DESIGNATION	MOD.	NOTAS NOTES NOTA MITSCHRIFT NOTES
01A		00H00308971	R-SCTO. BASCULANTE SUBRIBALTABILE SWING ARM SUB-ASSY	SCHWINGENACHSE BRAS OSCILLANT	1 2 3 4 5 6 7 8 9 A B C D E F G H I J K L M N O	
02A		00H01304202	CTO. EJE RDA. TRAS. ASSE RUOTA POST. REAR WHEEL AXLE	HINTERRADACHSE AXE ROUE ARRIERE	1 2 3 4 5 6 7 8 9 A B C D E F G H I J K L M N O	
03A		00003112322	ARAND.EJE RUEDA.12I25X20X2. RONDELLA ASSE RUOTA.12I25X20X2 FRONT WHEEL AXLE WASHER	SHEIBE RADACHSE 12,25X20X2 RONDELLE AXE ROUE 12,25X20X	1 2 3 4 5 6 7 8 9 A B C D E F G H I J K L M N O	
04A		00002503230	CASQ.EJE BASCTE.C-4. GHIERA ASSE RIBALTABILE C-4 SWING ARM BUSHING	BUCHSE ENTRETOISE AXE BRAS OSCIL	1 2 3 4 5 6 7 8 9 A B C D E F G H I J K L M N O	
05A		00H00301401	CASQ.CARTELA MOTOR. GHIERA ORECCHIA MOTORE ENGINE BRACKET BUFFER BUSHING	BUCHSE ENTRETOISE AXE BRAS OSCIL	1 2 3 4 5 6 7 8 9 A B C D E F G H I J K L M N O	
06A		00D01300192	ARAND.EJE RUEDA TRAS. RONDELLA ASSE RUOTA POSTERIORE WHEEL AXLE WASHER	SCHEIBE RONDELLE D12,5X30X2MM	1 2 3 4 5 6 7 8 9 A B C D E F G H I J K L M N O	
07A		00012061200	TOR. C/RED. CRUZ 6 X 12 VITE TESTA CROCE NERA 6 X 12 PHILIPS SCREW 6 X 12	SCHRAUBE.6M100X12.NG.D-798 VIS A TETE RONDE A FENTES C	1 2 3 4 5 6 7 8 9 A B C D E F G H I J K L M N O	
08A		00011041300	TOR. AUTR. C/CRUZ 4,8 X 13 VITE AUTOAV. 4,8 X 13 SELF-THREADING HEAD 4,8 X 13	SCHRAUBE 4,8X13 VIS	1 2 3 4 5 6 7 8 9 A B C D E F G H I J K L M N O	
09A		00H01803331	PLACA ROZAMTO.CADENA PIASTRA ATTRITO CATENA CHAIN FORCHIN PLATE/FLARGE	KETTEN-REIBPLATTE PLAQUE GLISSEMENT CHAINE	1 2 3 4 5 6 7 8 9 A B C D E F G H I J K L M N O	
10A		00H01508191	CTO.AMORTIGUADOR S-R AMMORTIZZATORE SHOCK ABSORBER.	FEDERBEIN AMORTISSEUR	1 2 3 4 5 6 7 8 9 A B C D E F G H I J K L M N O	
11A		00H00303892	TOR.FIJ. SUP. AMORTIG. VITE FISSAGGIO AMMORTIZZATORE SHOCK ABSORBER SEC. SCREW	STOSSDMPFER BEFESTIGUNGSM VIS FIXATION AMORTISSEUR 12	1 2 3 4 5 6 7 8 9 A B C D E F G H I J K L M N O	

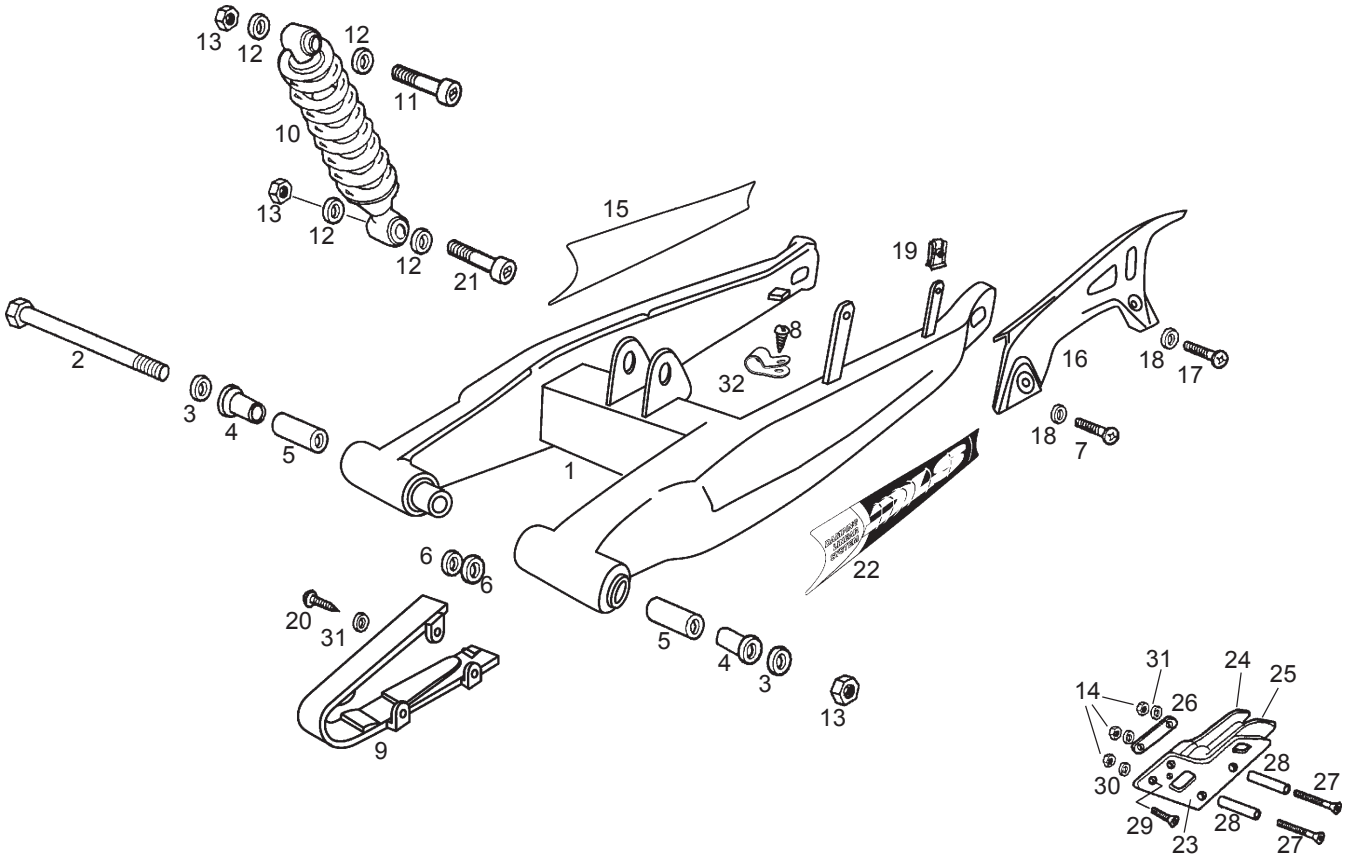

Fig.	Ver.	COD. KOD.	DESCRIPCIÓN DENOMINAZIONE NAME	BEZEICHNUNG DESIGNATION	MOD.	NOTAS NOTES NOTA MITSCHRIFT NOTES
12A		00003115422	ARAND.FIJ.AMORTGD.ANTORCHA. RONDELLA FISSAGGIO AMMORTIZZAT SWING ARM LOCK WASHER	SCHWINGENACHSE BRAS OSCILLANT	1 2 3 4 5 6 7 8 9 A B C D E F G H I J K L M N O	
13A		00023112000	TCA.AUTOBLOC.12M175.D-985/8.8. DADO AUTOBLOCCANTE 12M175.D-98 SELF-LOCKING NUT 12M175	MUTTER SELBSTS 12M175 ECROU INDESSERABLE12M175	1 2 3 4 5 6 7 8 9 A B C D E F G H I J K L M N O	
14A		00000023051	TCA.AUTOBLOC. 5M80. DIN-982. DADO AUTOBOCCANTE 5M80 DIN-982 SELF-LOCKING NUT 5M80	MUTTER SELBSTS 5M80 DIN-98 ECROU INDESSERRABLE 5M80 DI	1 2 3 4 5 6 7 8 9 A B C D E F G H I J K L M N O	
15A		00H00303331	CALCA DR.BASCTE. DECALCO RIBALTABILE DECAL	SCHRIFTZUG ADHESIF	1 2 3 4 5 6 7 8 9 A B C D E F G H I J K L M N O	
16A		00H01508181	CUBRECADENAS COPRICATENA CHAIN COVER	KETTENSCHUTZ COUVRE CHAINE	1 2 3 4 5 6 7 8 9 A B C D E F G H I J K L M N O	
17A		00012161600	TOR.C/CRUZ.NG.6M100X16.D7985-Z VITE TESTA CROCE NERA PHILIPS SCREW	SCHRAUBE 6M100X16 D-7985 VIS T.CROIX NOIR 6M100X16 D	1 2 3 4 5 6 7 8 9 A B C D E F G H I J K L M N O	
18A		00D01200171	ARAND.EJE LEVA-FIJ.CUBRECAD. RONDELLA WASHER	SCHEIBE RONDELLE	1 2 3 4 5 6 7 8 9 A B C D E F G H I J K L M N O	
19A		00D01501371	TCA.FIJ.CUBRECAD.212827 DADO FISSAGGIO NUT	MUTTER ECROU	1 2 3 4 5 6 7 8 9 A B C D E F G H I J K L M N O	
20A		00011141300	TOR.AUT.C/CR.NG.4,8X13.D-7981B VITE AUTOFILETTANTE TESTA CROC SCREW, SELF TAPPING 4.8MM13	SCHRAUBE BOULON	1 2 3 4 5 6 7 8 9 A B C D E F G H I J K L M N O	
21A		00H00300912	TORN. INF. AMORT. 12 X 45 VITE FISSAGGIO AMORT. SHOCK ABSORBER SEC. SCREW	SOTSSDMPFER BEFESTIGUNGSM VIS FIXATION AMORTISSEUR	1 2 3 4 5 6 7 8 9 A B C D E F G H I J K L M N O	
22A		00H00300621	CALCA IZ.BASCTE. DECALCO RIBALTABILE DECAL	SCHRIFTZUG ADHESIF	1 2 3 4 5 6 7 8 9 A B C D E F G H I J K L M N O	

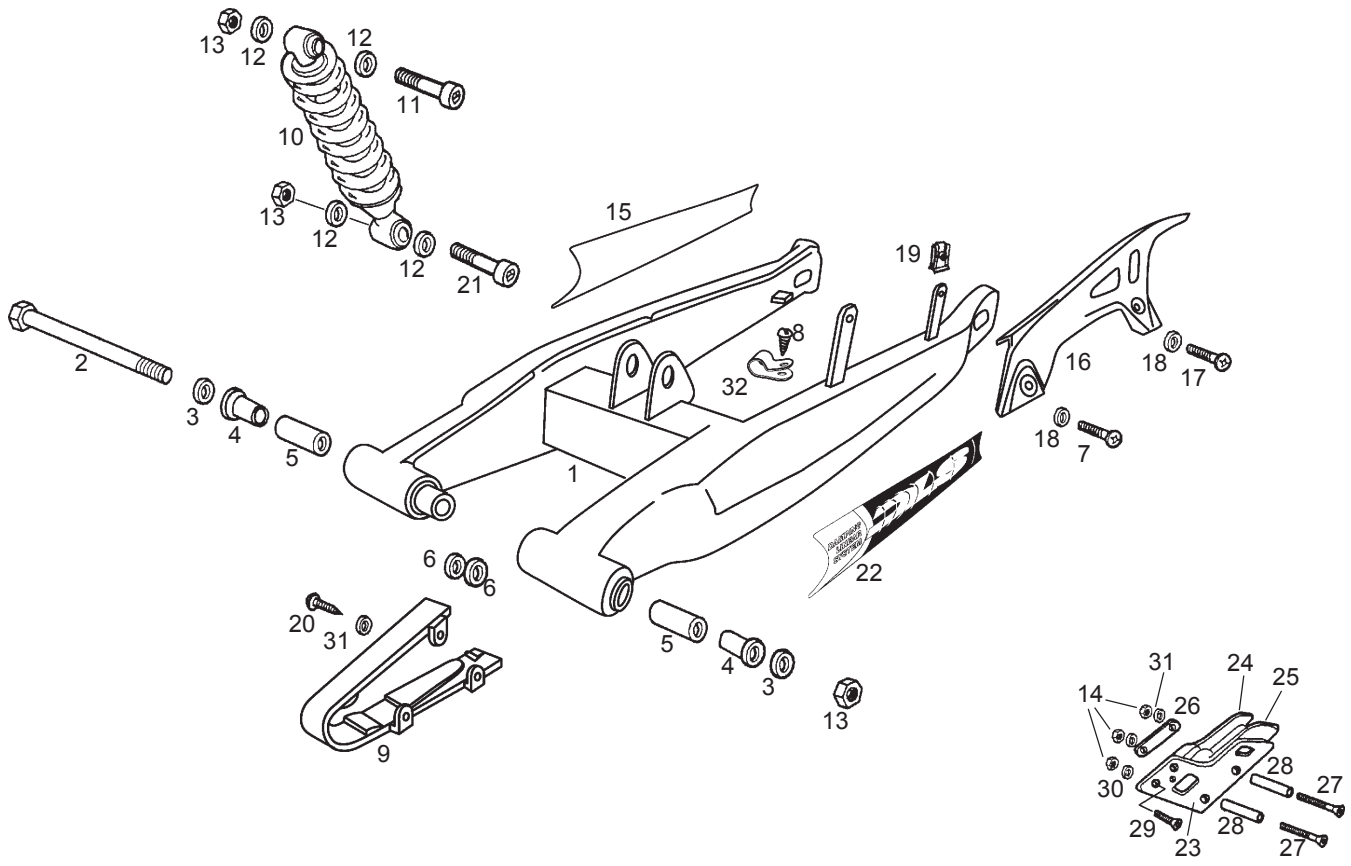

Fig.	Ver.	COD. KOD.	DESCRIPCIÓN DENOMINAZIONE NAME	BEZEICHNUNG DESIGNATION	MOD.	NOTAS NOTES NOTA MITSCHRIFT NOTES
23A		00H01801721	PLACA IZ.GUIA CADENA PIASTRA SINISTRA GUIDA CATENA LF.CHAIN GUIDE PLATE	HALTER KETTENFUHRUNG PLAQUE GAUCHE	1 2 3 4 5 6 7 8 9 A B C D E F G H I J K L M N O	
24A		00H01802291	GUIA INT.GUIA CADENA PIASTRA DESTRA GUIDA CATENA SE RT.CHAIN GUIDE PLATE	HALTER KETTEN FUHRUNG PLAQUE DROITE	1 2 3 4 5 6 7 8 9 A B C D E F G H I J K L M N O	
25A		00H01803771	GUIA EXT.GUIA CADENA GUIDA SOSTEGNO CATENA SV/91 CHAIN SUPPORT GUIDE	GLEITBAHN GUIDE CHAINE	1 2 3 4 5 6 7 8 9 A B C D E F G H I J K L M N O	
26A		00H01800811	PLACA FIJ.GUIA CADENA PIASTRA DESTRA GUIDA CATENA SE RT.CHAIN GUIDE PLATE	HALTER KETTEN FUHRUNG PLAQUE DROITE	1 2 3 4 5 6 7 8 9 A B C D E F G H I J K L M N O	
27A		00013054500	TOR.C/AVELL.ALL.5M80X45. VITE SCREW	INBUSSCHRAUBE MOTOR BEFEST VIS	1 2 3 4 5 6 7 8 9 A B C D E F G H I J K L M N O	
28A		00H01801791	CASQ.PLACA GUIA CADENA SDA-97. GHIERA BUSHING	FUHRUNGSBUCHSE GABELSCHENK ENTRETOISE	1 2 3 4 5 6 7 8 9 A B C D E F G H I J K L M N O	
29A		00103061212	TOR.C/AV.ALL.6M100X12.D7991 VITE SCREW, ALLEN CISUNK 6MM1.00X12	INBUSSCHRAUBE VIS T. CREUSE	1 2 3 4 5 6 7 8 9 A B C D E F G H I J K L M N O	
30A		00000031060	ARAND.PLANA MECANIZ.D.6.DIN125 RONDELLA PIATTA D6 MACHINED FLAT WASHER D6 DIN-12	SCHEIBE D.6 ROND. PLATE MECANISEE D6DIN	1 2 3 4 5 6 7 8 9 A B C D E F G H I J K L M N O	
31A		00000031050	ARAND.PLANA MEC.D.5.DIN125-B RONDELLA PIATTA D5 MACHINED FLAT WASHER D5	SCHEIBE D.5DIN-125 ROND.PLATE MECANISEE D.5.DI	1 2 3 4 5 6 7 8 9 A B C D E F G H I J K L M N O	
32A		00H01501811	BRIDA FIJ. CABLE FR. TR. FLANGIA CLAMP	BEF.-SCHELLE ENTRETOISE	1 2 3 4 5 6 7 8 9 A B C D E F G H I J K L M N O	

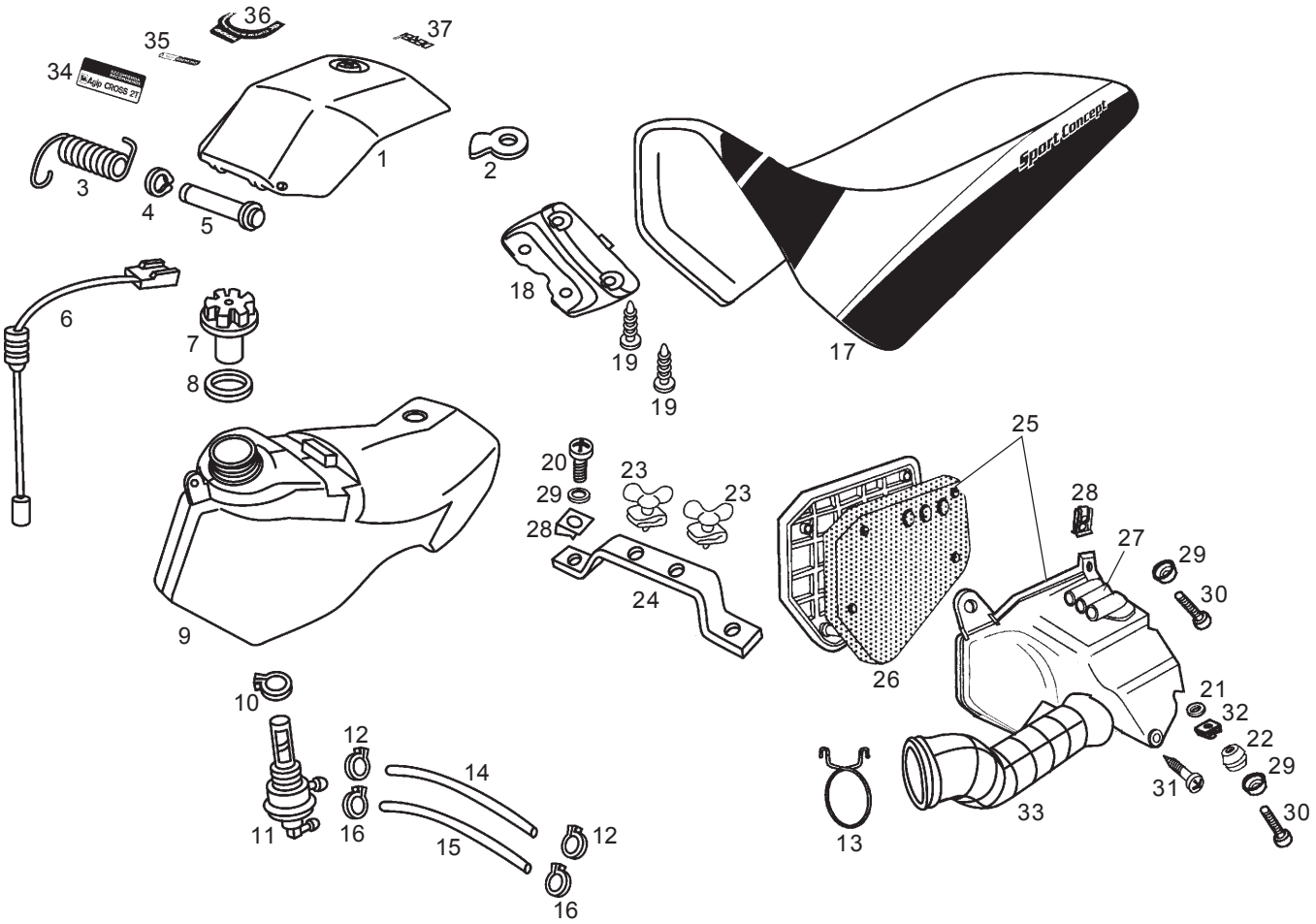

Fig.	Ver.	COD. KOD.	DESCRIPCIÓN DENOMINAZIONE NAME	BEZEICHNUNG DESIGNATION	MOD.	NOTAS NOTES NOTA MITSCHRIFT NOTES
01A		00H00414682	TAPA SUP. DEPSTO. NEGRO SUBCOMP.CARCASSA SUP.SERB. TOP TANK FRAME	TANKKLAPPE COUVERCLE DE RESERVOIR	1 D	
01B		00H00414681	TAPA SUP. DEPSTO. VERDE SUBCOMP.CARCASSA SUP.SERB. TOP TANK FRAME	TANKKLAPPE COUVERCLE DE RESERVOIR	2 E	
01C		00H00414684	TAPA SUP. DEPSTO. AZUL SUBCOMP.CARCASSA SUP.SERB. TOP TANK FRAME	TANKKLAPPE COUVERCLE DE RESERVOIR	3 F	
01D		00H00414683	TAPA SUP. DEPSTO. ROJO SUBCOMP.CARCASSA SUP.SERB. TOP TANK FRAME	TANKKLAPPE COUVERCLE DE RESERVOIR	4 G	
01E		00H00404684	TAPA SUP. DEPSTO. NEGRO SUBCOMP.CARCASSA SUP.SERB. TOP TANK FRAME	TANKKLAPPE COUVERCLE DE RESERVOIR	5 9 H L	
01F		00H00404682	TAPA SUP. DEPSTO. VERDE SUBCOMP.CARCASSA SUP.SERB. TOP TANK FRAME	TANKKLAPPE COUVERCLE DE RESERVOIR	6 A I M	
01G		00H00404686	TAPA SUP. DEPSTO. AZUL SUBCOMP.CARCASSA SUP.SERB. TOP TANK FRAME	TANKKLAPPE COUVERCLE DE RESERVOIR	7 B J N	
01H		00H00404681	TAPA SUP. DEPSTO. ROJO SUBCOMP.CARCASSA SUP.SERB. TOP TANK FRAME	TANKKLAPPE COUVERCLE DE RESERVOIR	8 C K O	
02A		00H00604141	PALANCA CIERRE LEVA LEVER	SCHLOSS-VERSCHLUSSHEBEL LEVIER FERMETURE SELLE	1 2 3 4 5 6 7 8 9 A B C D E F G H I J K L M N O	
03A		00H06303762	MUELLE ARTIC.TAPA DEPTO.GASOL. MOLLA ARTIC. COPER. SUP. SERB. SPRING	RITZELFEDER RESSORT	1 2 3 4 5 6 7 8 9 A B C D E F G H I J K L M N O	
04A		00047030400	ANILLO SEG.EJES D.4.DIN-6799. ANELLO SICUREZZA ASSI D.4 PIN SECURING CIRCLIP D4. DIN-6	SICHERHEITSRING ACHSE D.4 ANNEAU SECURITE AXE D.4	1 2 3 4 5 6 7 8 9 A B C D E F G H I J K L M N O	

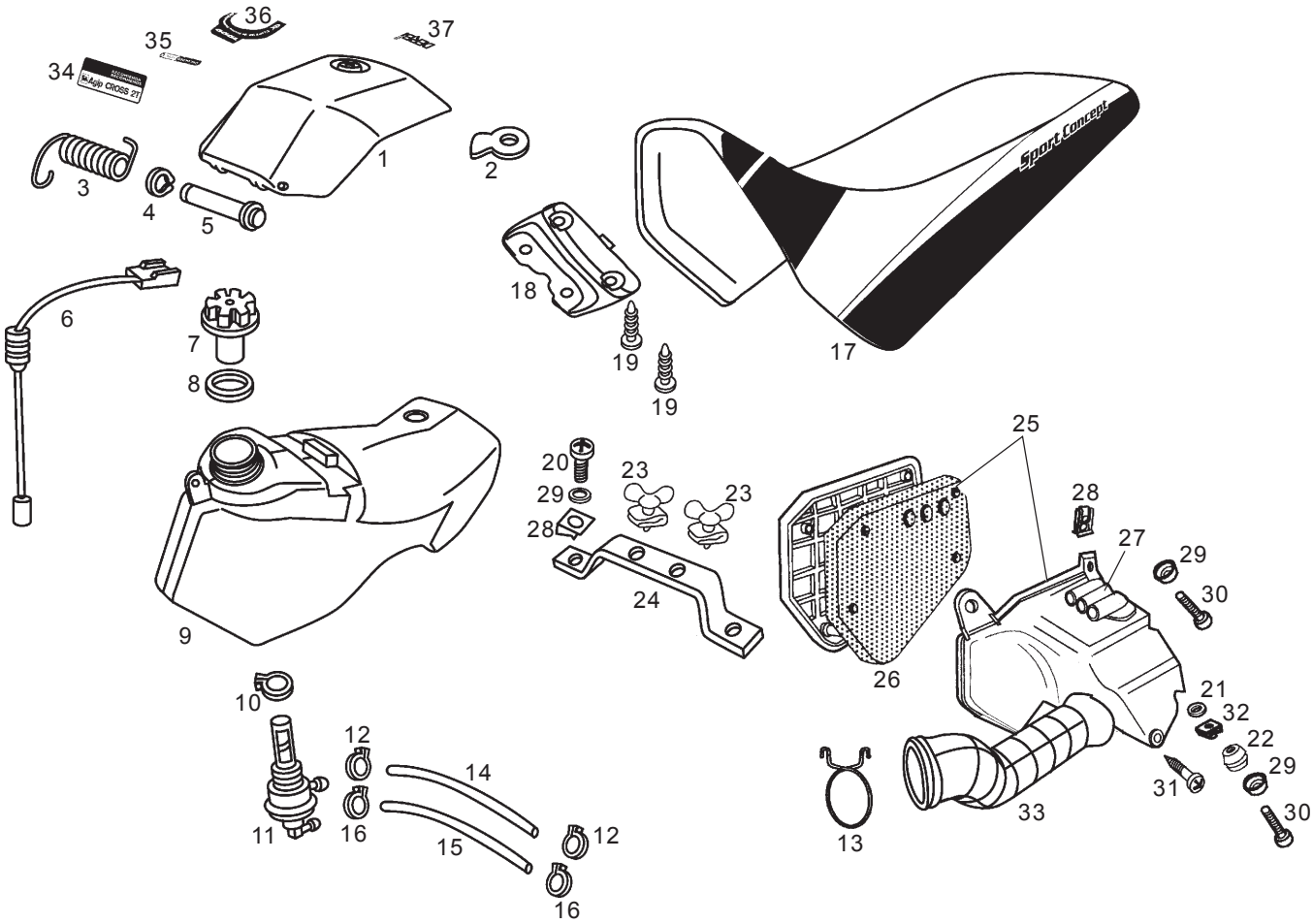

Fig.	Ver.	COD. KOD.	DESCRIPCIÓN DENOMINAZIONE NAME	BEZEICHNUNG DESIGNATION	MOD.	NOTAS NOTES NOTA MITSCHRIFT NOTES
05A		00H06303752	EJE ARTIC.TAPA DEPOS.GASOLINA ASSE ARTIC. COPERC.SUP.SERB. AXLE	STIFT AXE	1 2 3 4 5 6 7 8 9 A B C D E F G H I J K L M N O	
06A		00H04302181	CTO. NIVEL GASOLINA LIVELLO BENZINA GAS LEVEL SENSOR ASSY.	KRAFTSTOFFSTAND ENSEMBLE FLOTTEUR ESSENCE	1 2 3 4 5 6 7 8 9 A B C D E F G H I J K L M N O	
07A		00F00400131	CTO. TAPON DEPTO. GASOLINA V. BOX TAPPO SERBATOIO BENZINA FUEL TANK CAP ASSY	FUEL TANK CAP ASSY ENS.BOUCHON RESERV.ESSENCE	1 2 3 4 5 6 7 8 9 A B C D E F G H I J K L M N O	
08A		00F00400771	R-ARAND. TAPON DEPOSITO RONDELLA TAPPO SERBATOIO FUEL TANK CAP WASHER	SCHEIBE F.TANKDECKEL R-RONDELLE BOUCHON RESERVOI	1 2 3 4 5 6 7 8 9 A B C D E F G H I J K L M N O	
09A		00H00406011	DEPOSITO.GASOLINA SERBATOIO BENZINA FUEL TANK	BENZINTANK RESERVOIR ESSENCE	1 2 3 4 5 6 7 8 9 A B C D E F G H I J K L M N O	
10A		00G00400501	ABRAZ.FIJ.GRIFO.16-25 FASCETTA FISSAGGIO RUBINETTO FUEL COCK SECURING CLAMP	BEF.-SCHELLE F.HAHN 16-2 BRIDE FIXATION ROBINET.16-2	1 2 3 4 5 6 7 8 9 A B C D E F G H I J K L M N O	
11A		00G00400181	CTO. GRIFO GASOLINA RUBINETTO BENZINA FUEL COCK ASSY	KRAFTSTOFFHAHN UNTERDRUCK ENSEMBLE ROBINET ESSENCE	1 2 3 4 5 6 7 8 9 A B C D E F G H I J K L M N O	
12A		00D03700131	ABRAZ.ELAST.9,8 FASCETTA ELASTICA TUBO BENZINA FUEL PIPE ELASTIC CLAMP	ELAST.KLAMMER GASLEITUNG CRAMPON ELASTIQUE TUBE ESSE	1 2 3 4 5 6 7 8 9 A B C D E F G H I J K L M N O	
13A		00G03204272	MUELLE TUBO ADMISION ANELLO CARB. AIR INTAKE TUBE	SCHAUCHSCHELLE COLLIER	1 2 3 4 5 6 7 8 9 A B C D E F G H I J K L M N O	
14A		00F00403321	TUBO GASOLINA V.TOP. TUBO BENZINA FUEL PIPE	BENZINSCHLAUCH TUYAU ESSENCE	1 2 3 4 5 6 7 8 9 A B C D E F G H I J K L M N O	
15A		00H06201061	TUBO DEPRESION TUBO DEPRESSIONE DEPRESSION PIPE	BENZINSCHLAUCH TUYAU ESSENCE	1 2 3 4 5 6 7 8 9 A B C D E F G H I J K L M N O	

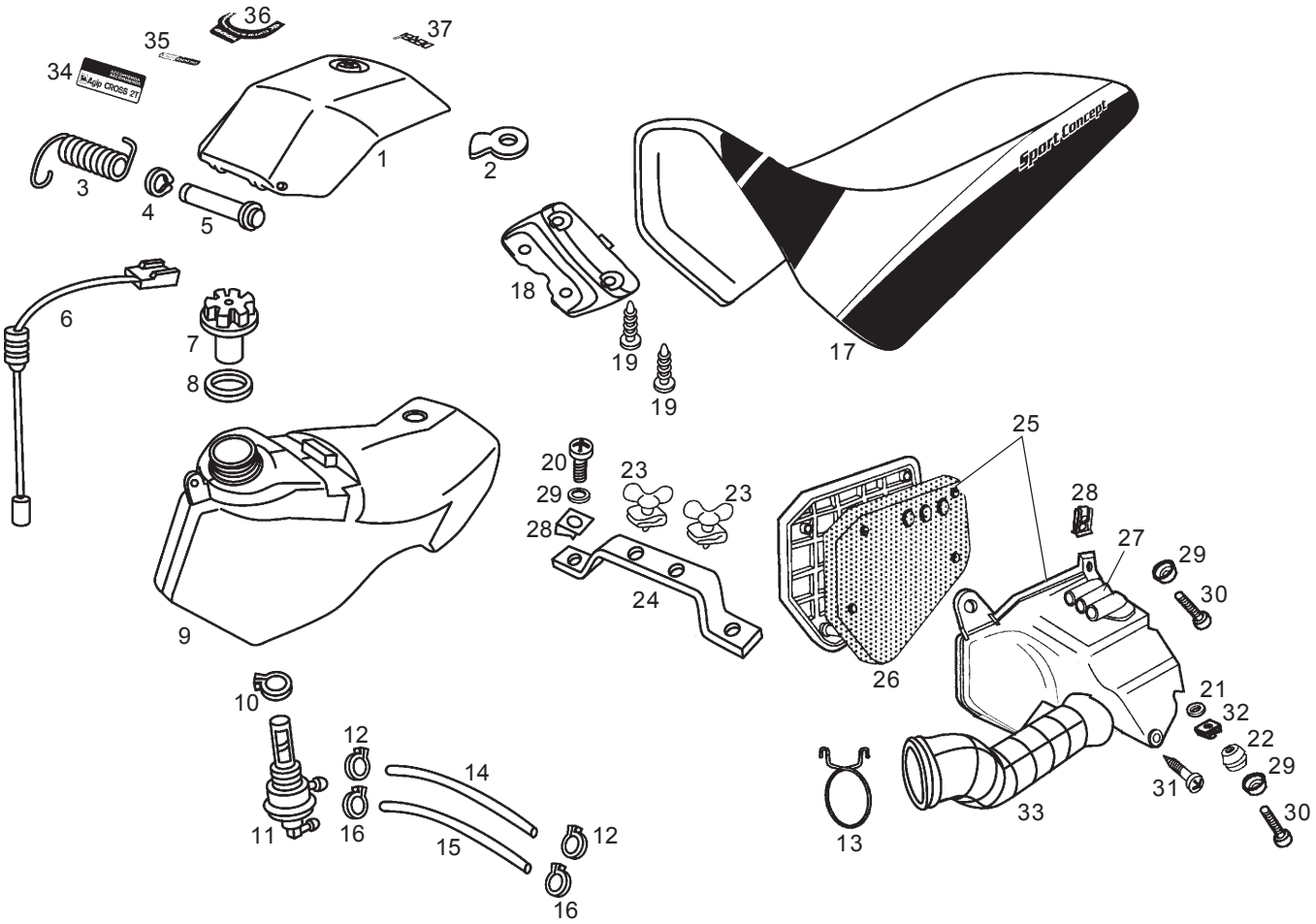

Fig.	Ver.	COD. KOD.	DESCRIPCIÓN DENOMINAZIONE NAME	BEZEICHNUNG DESIGNATION	MOD.	NOTAS NOTES NOTA MITSCHRIFT NOTES
16A		00F03710131	ABRAZ. ELAST.D.8I6 FASCETTA ELASTICA D.8I6 CLAMP	BEF.-SCHELLE ENTRETOISE	1 2 3 4 5 6 7 8 9 A B C D E F G H I J K L M N O	
17A		00H00618014	CTO.SILLIN NEGRA COMP.SELLINO SEAT	SITZBANK SELLE	1 5 9 D H L	
17B		00H00618012	CTO.SILLIN VERDE COMP.SELLINO SEAT	SITZBANK SELLE	2 6 A E I M	
17C		00H00618013	CTO.SILLIN AZUL COMP. SELLINO SEAT	SITZBANK SELLE	3 7 B F J N	
17D		00H00618015	CTO.SILLIN ROJO COMP. SELLINO SEAT	SITZBANK SELLE	4 G	
17E		00H00618011	CTO.SILLIN ROJO COMP. SELLINO SEAT	SITZBANK SELLE	8 C K O	
18A		00H00600341	SUPLEMENTO BASE SILLIN S/R SUPPLEMENTO SELLINO SEAT SUPPLEM.	ZUBEHOR SITZBANK SUPL.SELLE	1 2 3 4 5 6 7 8 9 A B C D E F G H I J K L M N O	
19A		00011051801	TORNILLO PARA PLASTICO 5.1 X 18 VITE AUTOFILETTANTE 5,1 X 18 SELF-TAPPING SCREW	SELF-TAPPING SCREW VIS TARAUD	1 2 3 4 5 6 7 8 9 A B C D E F G H I J K L M N O	
20A		00012061200	TOR. C/CR. 6 M 100 X 12 VITE TONDO CROCE 6 X 12 SCREW 6 X 12	SCHRAUBE.6M100X12.NG.D-798 VIS A TETE RONDE A FENTES C	1 2 3 4 5 6 7 8 9 A B C D E F G H I J K L M N O	
21A		00008915020	PROTECCION CABLES PROTEZIONE CAVI RUBBER, CABLE PROTECTOR	GUMMI PASSE-CABLE	1 2 3 4 5 6 7 8 9 A B C D E F G H I J K L M N O	
22A		00D01500552	CAZLTA. FIJ. SILENC. SCADELLINO FISSAGGIO HOUSING	ABDECKSCHEIBE CUVETTE	1 2 3 4 5 6 7 8 9 A B C D E F G H I J K L M N O	

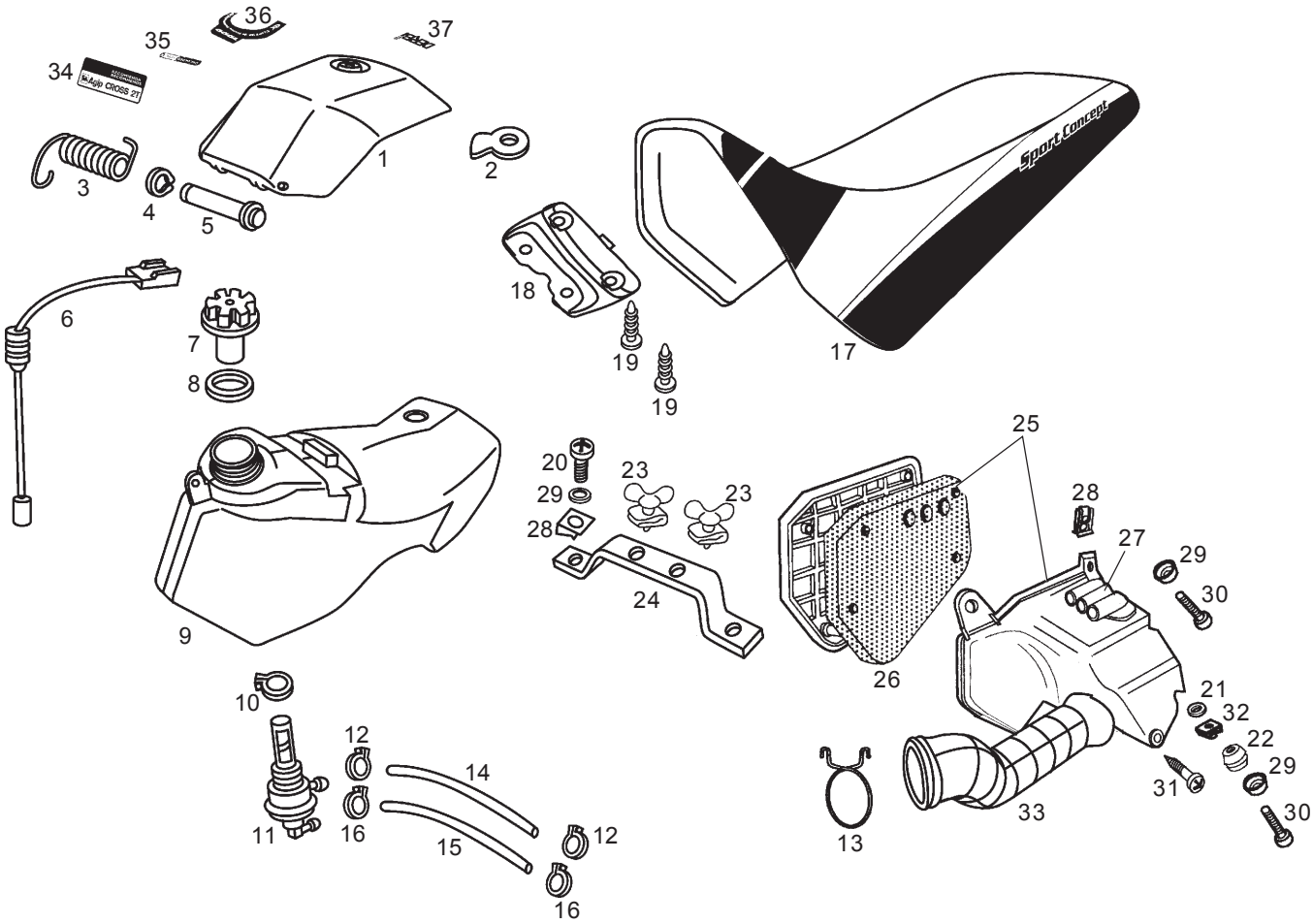

Fig.	Ver.	COD. KOD.	DESCRIPCIÓN DENOMINAZIONE NAME	BEZEICHNUNG DESIGNATION	MOD.	NOTAS NOTES NOTA MITSCHRIFT NOTES
23A		00H06100261	CTO.CIERRE REPIDO CHIUSURA SELLINO LOCKING ASSY	SCHOLSS ENSEMBLE SERRURE	1 2 3 4 5 6 7 8 9 A B C D E F G H I J K L M N O	
24A		00H00404051	PUENTE FIJ. DPSTO. SUPPORTO INF. SERBATOIO LOWER FUEL TANK BRACKET	LOWER FUEL TANK BRACKET SUPPORT INFÎRIEUR RÎSERVOIR	1 2 3 4 5 6 7 8 9 A B C D E F G H I J K L M N O	
25A		00H01800541	CTO.CAJA FILTRO CASSA FILTRO AIR FILTER BOX	FILTERKASTEN ENSEMBLE BOITE FILTRE	1 2 3 4 5 6 7 8 9 A B C D E F G H I J K L M N O	
26A		00H03201251	ESPUMA FILTRO AIRE ESPANSO FILTRO ARIA AIR FILTER MESH	LUFTFILTERSCHAUM FILTRE AIR	1 2 3 4 5 6 7 8 9 A B C D E F G H I J K L M N O	
27A		00D03210491	TUBO ASPIRACION YMBO FD TUBO ASPIRAZIONE YUMBO FD AIR INTAKE	SAUGROHR TUBE DIASPIRATION	1 2 3 4 5 6 7 8 9 A B C D E F G H I J K L M N O	
28A		00D01501371	TCA. FIJ. CUBRECAD.212827 DADO FISSAGGIO NUT	MUTTER ECROU	1 2 3 4 5 6 7 8 9 A B C D E F G H I J K L M N O	
29A		00D01200171	ARAND.EJE LEVA-FIJ.CUBRECAD. RONDELLA WASHER	SCHEIBE RONDELLE	1 2 3 4 5 6 7 8 9 A B C D E F G H I J K L M N O	
30A		00012161600	TOR.C/CRUZ.NG.6M100X16 D-7985 VITE TESTA CROCE NERA PHILIPS SCREW	SCHRAUBE 6M100X16 D-7985 VIS T.CROIX NOIR 6M100X16 D	1 2 3 4 5 6 7 8 9 A B C D E F G H I J K L M N O	
31A		00073481964	TOR.AUTR.C/CRUZ 4,8 X 19. DIN7981 VITE AUTOFILETTANTE TESTA CROC SELF-THREADING HEAD. SCR. 4,8X19	SCHRAUBE VIS	1 2 3 4 5 6 7 8 9 A B C D E F G H I J K L M N O	
32A		00D01500471	CASQ. SILENT. SILENC. GHIERA BUSHING	FUHRUNGSBUCHSE GABELSCHENK ENTRETOISE	1 2 3 4 5 6 7 8 9 A B C D E F G H I J K L M N O	
33A		00H03207261	TUBO ADMISION. TUBO AMMISSIONE AIR INTAKE HOSE	ENLAISRROR HUNTER TUYAU DIADMISSION HUNTER	1 2 3 4 5 6 7 8 9 A B C D E F G H I J K L M N O	

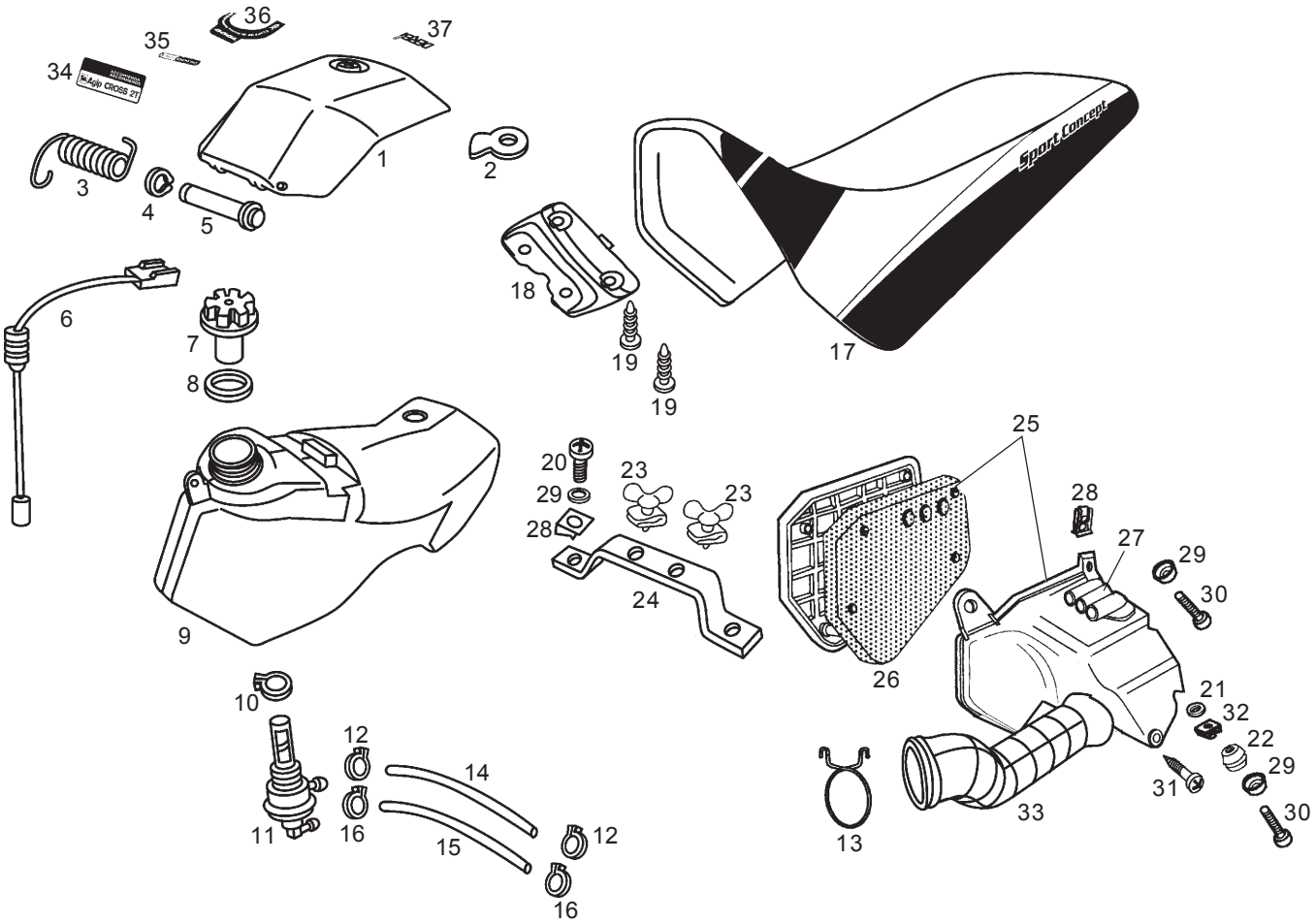

Fig.	Ver.	COD. KOD.	DESCRIPCIÓN DENOMINAZIONE NAME	BEZEICHNUNG DESIGNATION	MOD.	NOTAS NOTES NOTA MITSCHRIFT NOTES
34A		00H00401521	CALCA AGIP CROSS ADESIVO AGIP DECAL AGIP	SCHRIFTZUG AGIP SPEED ADHESIF AGIP SPEED	1 2 3 4 D E F G	
35A		00G04401481	CALCA UNLEADED FUEL ADESIVO UNLEADED FUEL DECAL UNLEADED FUEL	SCHRIFTZUG UNLEADED FUEL ADHESIF UNLEADED FUEL	1 2 3 4 5 6 7 8 9 A B C D E F G H I J K L M N O	
36A		00H00404471	CALCA CHAMPION FRANCE 2001 ADESIVO CHAMPION FRANCE 2001 DECAL CHAMPION FRANCE 2001	SCHRIFTZUG CHAMPION FRANCE'01 ADHESIF CHAMPION FRANCE 2001	5 6 7 8 H I J K	FRANCE
37A		00F04601121	CALCA DERBI ADESIVO DERBI DECAL DERBI	SCHRIFTZUG DERBI ADHESIF DERBI	1 2 3 4 5 6 7 8 9 A B C D E F G H I J K L M N O	

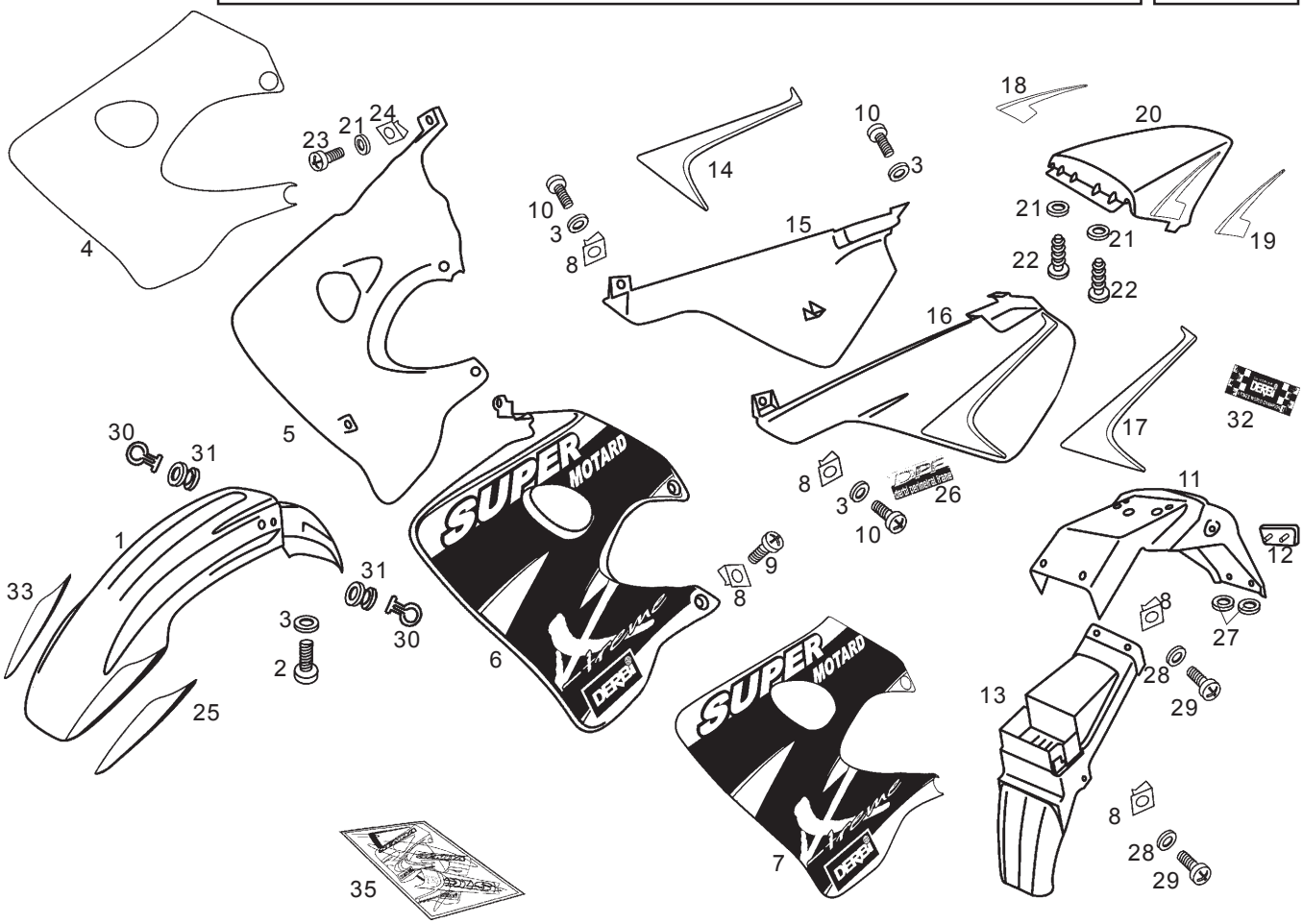

Fig.	Ver.	COD. KOD.	DESCRIPCIÓN DENOMINAZIONE NAME	BEZEICHNUNG DESIGNATION	MOD.	NOTAS NOTES NOTA MITSCHRIFT NOTES
01A		00H00708438	GUARDAB. DT. NEGRA PARAFANGO ANTERIORE FRONT MUDGUARD ASSY	KOTFLUGEL VORN GARDE-BOUE AVANT RGE	1 D	
01B		00H00708436	GUARDAB. DT. VERDE PARAFANGO ANTERIORE FRONT MUDGUARD ASSY	KOTFLUGEL VORN GARDE-BOUE AVANT RGE	2 E	
01C		00H00708437	GUARDAB.DT. AZUL PARAFANGO ANTERIORE FRONT MUDGUARD ASSY	KOTFLUGEL VORN GARDE-BOUE AVANT RGE	3 F	
01D		00H00708435	GUARDAB. DT. ROJO PARAFANGO ANTERIORE FRONT MUDGUARD ASSY	KOTFLUGEL VORN GARDE-BOUE AVANT RGE	4 G	
01E		00H00708434	GUARDAB. DT. NEGRA PARAFANGO ANTERIORE FRONT MUDGUARD ASSY	KOTFLUGEL VORN GARDE-BOUE AVANT RGE	5 9 H L	
01F		00H00708432	GUARDAB. DT. VERDE PARAFANGO ANTERIORE FRONT MUDGUARD ASSY	KOTFLUGEL VORN GARDE-BOUE AVANT RGE	6 A I M	
01G		00H00708433	GUARDAB.DT. AZUL PARAFANGO ANTERIORE FRONT MUDGUARD ASSY	KOTFLUGEL VORN GARDE-BOUE AVANT RGE	7 B J N	
01H		00H00708431	GUARDAB. DT. ROJO PARAFANGO ANTERIORE FRONT MUDGUARD ASSY	KOTFLUGEL VORN GARDE-BOUE AVANT RGE	8 C K O	
02A		00012162000	TOR.C/EXAG. 5M80X16.DIN-933 VITE TESTA ESAGONALE 5M80X16 D HEX.HEAD SCREW 5M80X15	BOULON TETE HEX.5M80X15 D SCHRAUBE	1 2 3 4 5 6 7 8 9 A B C D E F G H I J K L M N O	
03A		00D01200171	ARAND.EJE LEVA-FIJ.CUBRECAD. RONDELLA WASHER	RONDELLE SCHEIBE	1 2 3 4 5 6 7 8 9 A B C D E F G H I J K L M N O	
04A		00H04918564	CALCA TAPAS DT. DR. NEGRA ADESIVO DECAL	SCHRIFTZUG ADHESIF	1 5 9 D H L	

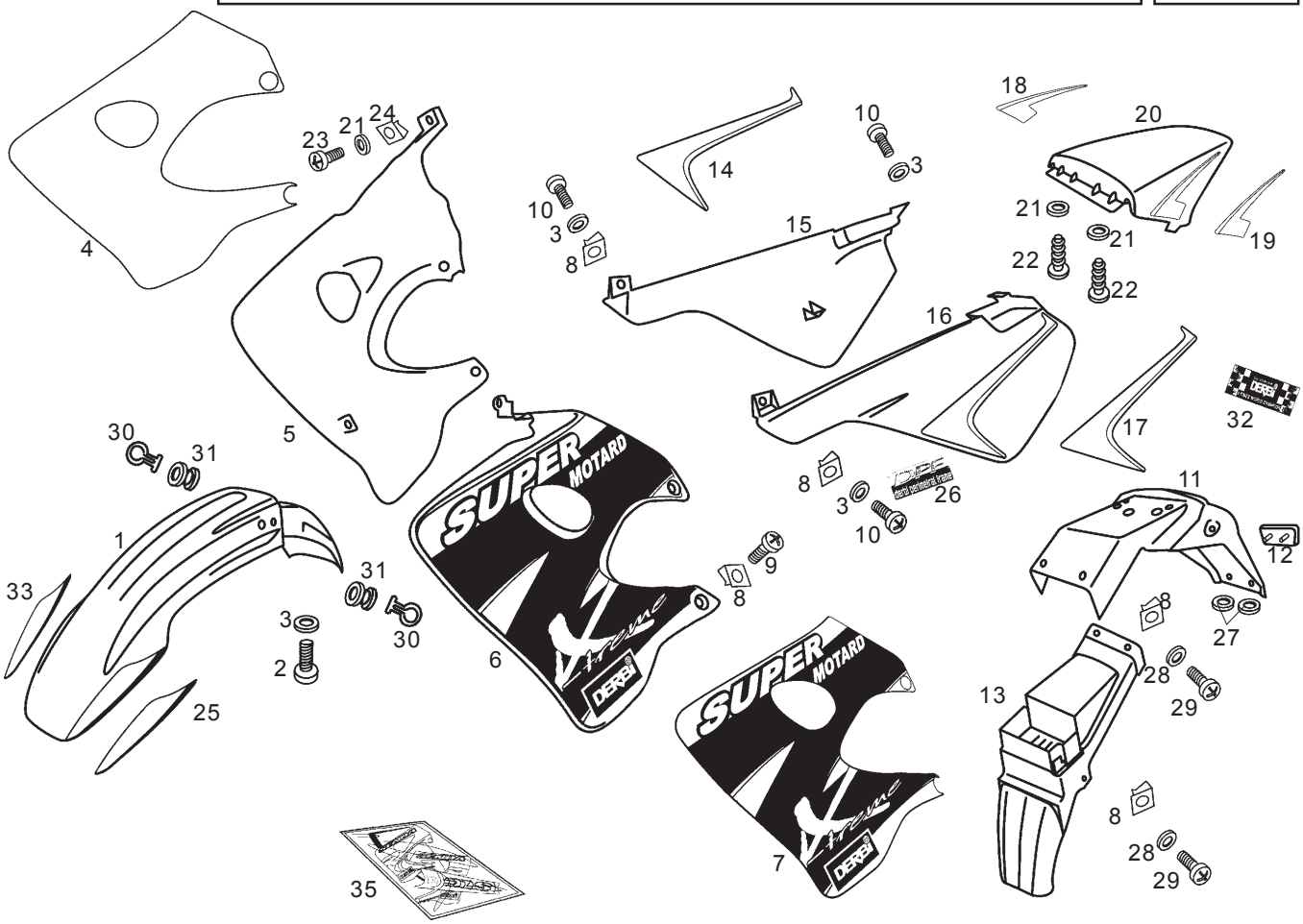

Fig.	Ver.	COD. KOD.	DESCRIPCIÓN DENOMINAZIONE NAME	BEZEICHNUNG DESIGNATION	MOD.	NOTAS NOTES NOTA MITSCHRIFT NOTES
04B		00H04918562	CALCA TAPAS DT. DR. VERDE ADESIVO DECAL	SCHRIFTZUG ADHESIF	2 6 A E I M	
04C		00H04918563	CALCA TAPAS DT. DR. AZUL ADESIVO DECAL	SCHRIFTZUG ADHESIF	3 7 B F J N	
04D		00H04918565	CALCA TAPAS DT. DR. ROJA ADESIVO DECAL	SCHRIFTZUG ADHESIF	4 G	
04E		00H04918561	CALCA TAPAS DT. DR. ROJA ADESIVO DECAL	SCHRIFTZUG ADHESIF	8 C K O	
05A		00H04427808	SCTO. TAPA DT. DR. NEGRA SUBCOMP.COP.ANT.DES.C/C. FRONT LH ADORNMENT	SEITENTEIL OUIE MOTEUR D.	1 D	
05B		00H04427806	SCTO. TAPA DT. DR. VERDE SUBCOMP.COP.ANT.DES.C/C. FRONT LH ADORNMENT	SEITENTEIL OUIE MOTEUR D.	2 E	
05C		00H04427807	SCTO. TAPA DT. DR. AZUL SUBCOMP.COP.ANT.DES.C/C. FRONT LH ADORNMENT	SEITENTEIL OUIE MOTEUR D.	3 F	
05D		00H04427805	SCTO. TAPA DT. DR. ROJO SUBCOMP.COP.ANT.DES.C/C. FRONT LH ADORNMENT	SEITENTEIL OUIE MOTEUR D.	4 G	
05E		00H04427804	SCTO. TAPA DT. DR. NEGRA SUBCOMP.COP.ANT.DES.C/C. FRONT LH ADORNMENT	SEITENTEIL OUIE MOTEUR D.	5 9 H L	
05F		00H04427802	SCTO. TAPA DT. DR. VERDE SUBCOMP.COP.ANT.DES.C/C. FRONT LH ADORNMENT	SEITENTEIL OUIE MOTEUR D.	6 A I M	
05G		00H04427803	SCTO. TAPA DT. DR. AZUL SUBCOMP.COP.ANT.DES.C/C. FRONT LH ADORNMENT	SEITENTEIL OUIE MOTEUR D.	7 B J N	

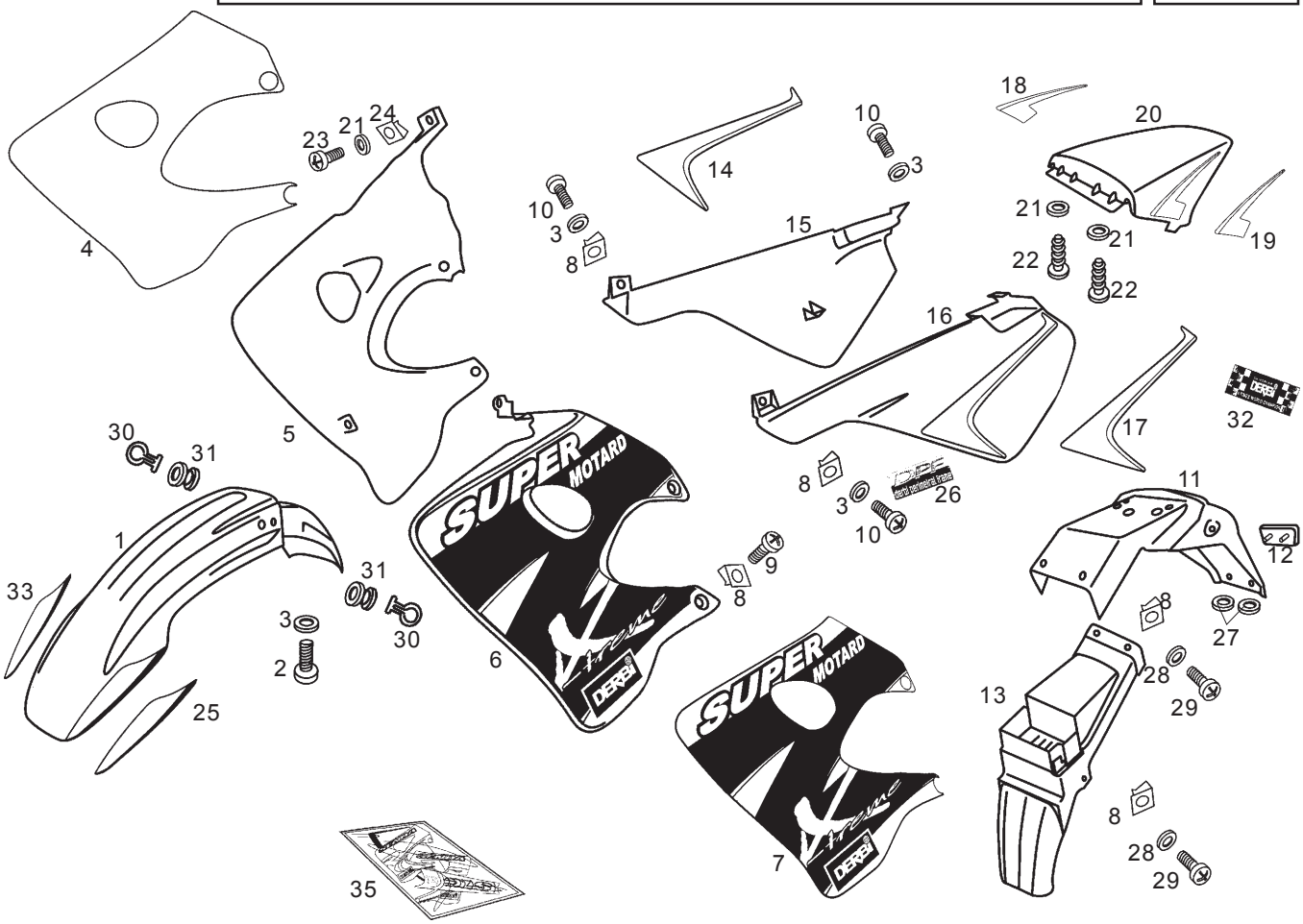

Fig.	Ver.	COD. KOD.	DESCRIPCIÓN DENOMINAZIONE NAME	BEZEICHNUNG DESIGNATION	MOD.	NOTAS NOTES NOTA MITSCHRIFT NOTES
05H		00H04427801	SCTO. TAPA DT. DR. ROJO SUBCOMP.COP.ANT.DES.C/C. FRONT LH ADORNMENT	SEITENTEIL OUIE MOTEUR D.	8 C K O	
06A		00H04427838	SCTO. TAPA DT. IZ. NEGRA SUBCOMP.COP.ANT.SIN.C/C FRONT RH ADORNMENT	KHULERVERKLEIDUNG OUIE MOTEUR G.	1 D	
06B		00H04427836	SCTO. TAPA DT. IZ. VERDE SUBCOMP.COP.ANT.SIN.C/C FRONT RH ADORNMENT	KHULERVERKLEIDUNG OUIE MOTEUR G.	2 E	
06C		00H04427837	SCTO. TAPA DT. IZ. AZUL SUBCOMP.COP.ANT.SIN.C/C FRONT RH ADORNMENT	KHULERVERKLEIDUNG OUIE MOTEUR G.	3 F	
06D		00H04427835	SCTO. TAPA DT. IZ. ROJO SUBCOMP.COP.ANT.SIN.C/C FRONT RH ADORNMENT	KHULERVERKLEIDUNG OUIE MOTEUR G.	4 G	
06E		00H04427834	SCTO. TAPA DT. IZ. NEGRA SUBCOMP.COP.ANT.SIN.C/C FRONT RH ADORNMENT	KHULERVERKLEIDUNG OUIE MOTEUR G.	5 9 H L	
06F		00H04427832	SCTO. TAPA DT. IZ. VERDE SUBCOMP.COP.ANT.SIN.C/C FRONT RH ADORNMENT	KHULERVERKLEIDUNG OUIE MOTEUR G.	6 A I M	
06G		00H04427833	SCTO. TAPA DT. IZ. AZUL SUBCOMP.COP.ANT.SIN.C/C FRONT RH ADORNMENT	KHULERVERKLEIDUNG OUIE MOTEUR G.	7 B J N	
06H		00H04427831	SCTO. TAPA DT. IZ. ROJO SUBCOMP.COP.ANT.SIN.C/C FRONT RH ADORNMENT	KHULERVERKLEIDUNG OUIE MOTEUR G.	8 C K O	
07A		00H04918574	CALCA TAPAS DT. IZ. NEGRA ADESIVO COPERC.ANT.SIN FRONT COVER LEFT DECAL	SCHRIFTZUG ADHESIF	1 5 9 D H L	
07B		00H04918572	CALCA TAPAS DT. IZ. VERDE ADESIVO COPERC.ANT.SIN FRONT COVER LEFT DECAL	SCHRIFTZUG ADHESIF	2 6 A E I M	

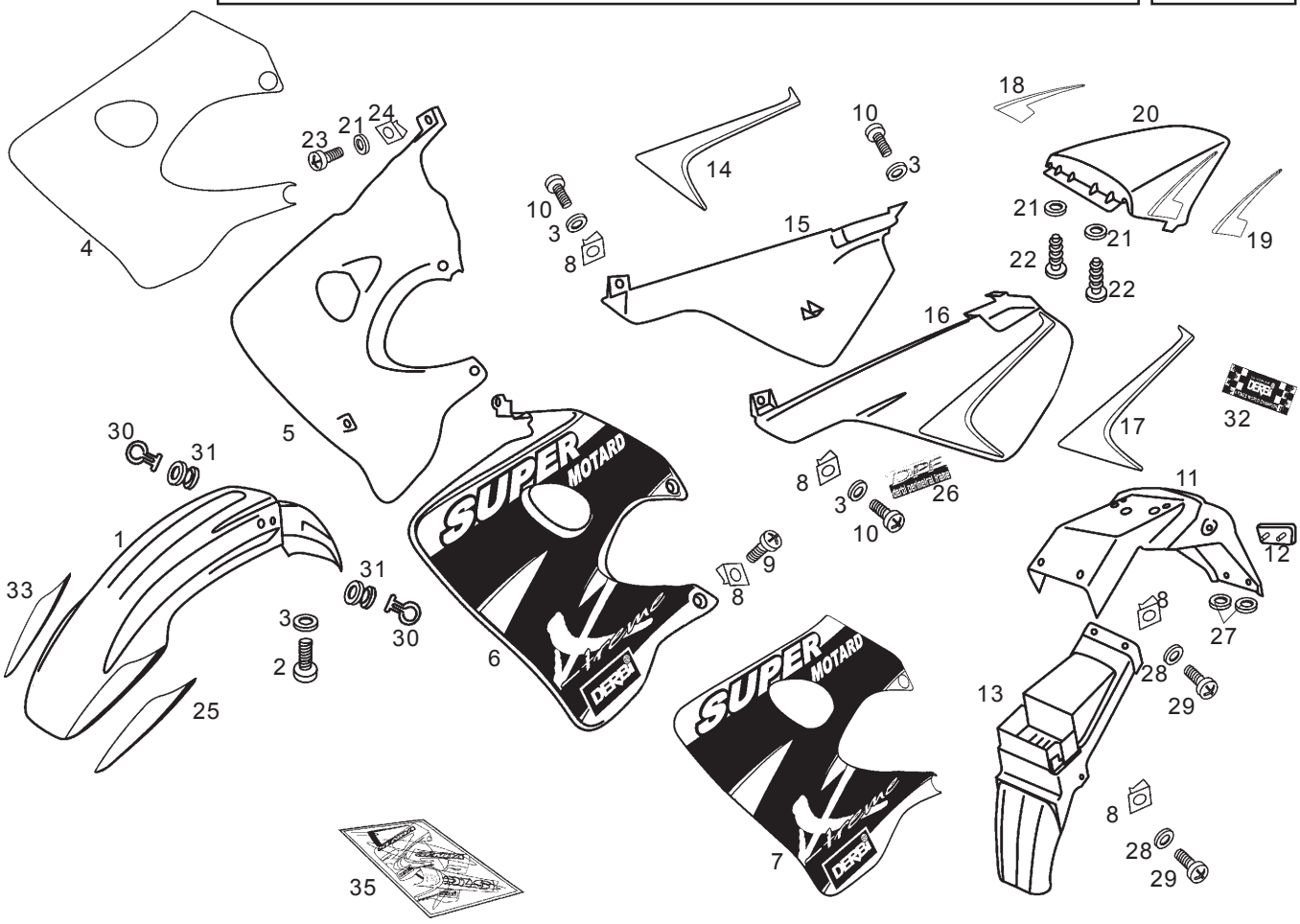

Fig.	Ver.	COD. KOD.	DESCRIPCIÓN DENOMINAZIONE NAME	BEZEICHNUNG DESIGNATION	MOD.	NOTAS NOTES NOTA MITSCHRIFT NOTES
07C		00H04918573	CALCA TAPAS DT. IZ. AZUL ADESIVO COPERC.ANT.SIN FRONT COVER LEFT DECAL	SCHRIFTZUG ADHESIF	3 7 B F J N	
07D		00H04918575	CALCA TAPAS DT. IZ. ROJA ADESIVO COPERC.ANT.SIN FRONT COVER LEFT DECAL	SCHRIFTZUG ADHESIF	4 G	
07E		00H04918571	CALCA TAPAS DT. IZ. ROJA ADESIVO COPERC.ANT.SIN FRONT COVER LEFT DECAL	SCHRIFTZUG ADHESIF	8 C K O	
08A		00D01501371	TCA.FIJ.CUBRECAD.212827 DADO FISSAGGIO NUT	ECROU MUTTER	1 2 3 4 5 6 7 8 9 A B C D E F G H I J K L M N O	
09A		00G01503701	TOR.FIJ.ESC.FRONTAL HUNTER 5.6 VITE FISSAGGIO SCUDO FRONTALE FRONT SHIELD SECURING SCREW	BOULON SER. FRONTAL HUNTER FRONT SHIELD SECURING SCREW	1 2 3 4 5 6 7 8 9 A B C D E F G H I J K L M N O	
10A		00012161600	TOR.C/RED.CRUZ.6M100X16.DIN- VITE TONDO CROCE .6M100X16.DIN SCREW,6M100X16	VIS T.CROIX NOIR 6M100X16 D SCHRAUBE 6M100X16 D-7985	1 2 3 4 5 6 7 8 9 A B C D E F G H I J K L M N O	
11A		00H00712341	SUPLEM.GUARD.TR. SUPPLEMENTO PARAFANGO POST. SUPPLEM. REAR FENDER	SUPL. GARDE BOUE AR. ZUBEHOR STAUBFANGER HINTEN	1 2 3 4 5 6 7 8 9 A B C D E F G H I J K L M N O	
12A		00G04400752	CAPTAFAROS TRAS.ROJO CATARIFRANGENTE POSTERIORE R REAR REFLECTOR	CATADIOPTRE ARRIERE RUCKS TRAHLER	1 2 3 4 5 6 7 8 9 A B C D E F G H I J K L M N O	
13A		00H00705121	GUARDAB.TR.NEW PARAFANGO POSTERIORE REAR MUDGUARD	GARDE BOUE ARRIERE KOTFLUGEL HINTEN	1 2 3 4 5 6 7 8 9 A B C D E F G H I J K L M N O	
14A		00H00515654	CALCA POST.TAPA LAT.DR. NEGRA ADESIVO POS.COPERC.LAT.DES. REAR SIDE COVER DECAL	AUFKLEBER DECAL FLANC D.	1 5 9 D H L	
14B		00H00515652	CALCA POST.TAPA LAT.DR. VERDE ADESIVO POS.COPERC.LAT.DES. REAR SIDE COVER DECAL	AUFKLEBER DECAL FLANC D.	2 6 A E I M	

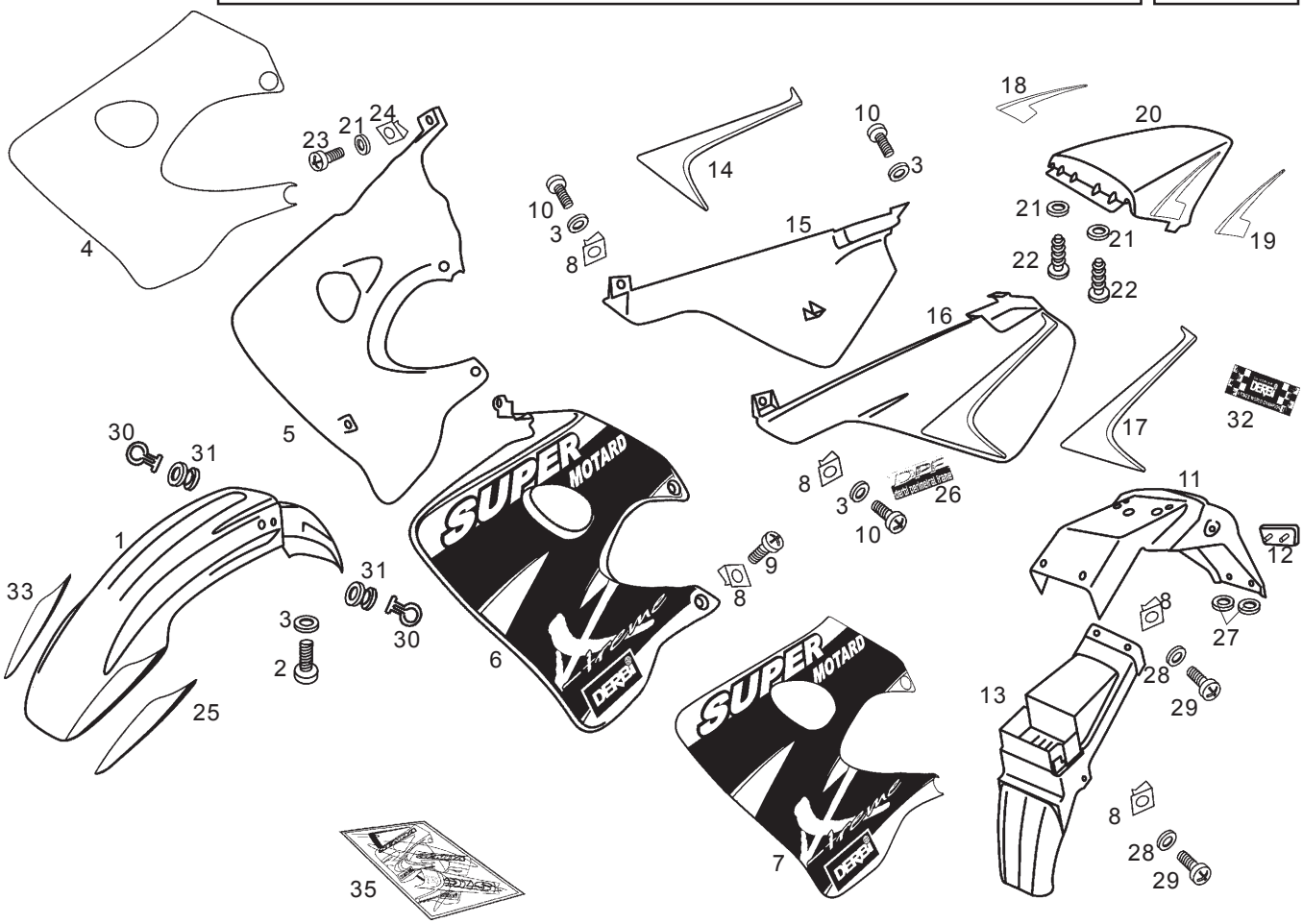

Fig.	Ver.	COD. KOD.	DESCRIPCIÓN DENOMINAZIONE NAME	BEZEICHNUNG DESIGNATION	MOD.	NOTAS NOTES NOTA MITSCHRIFT NOTES
14C		00H00515656	CALCA POST.TAPA LAT.DR. AZUL ADESIVO POS.COPERC.LAT.DES. REAR SIDE COVER DECAL	AUFKLEBER DECAL FLANC D.	3 7 B F J N	
14D		00H00515655	CALCA POST.TAPA LAT.DR. ROJO ADESIVO POS.COPERC.LAT.DES. REAR SIDE COVER DECAL	AUFKLEBER DECAL FLANC D.	4 G	
14E		00H00515651	CALCA POST.TAPA LAT.DR. ROJO ADESIVO POS.COPERC.LAT.DES. REAR SIDE COVER DECAL	AUFKLEBER DECAL FLANC D.	8 C K O	
15A		00H00541698	SCTO.TAPA LAT.DR..C/C NEGRA SUBCOMP.COPERC.LAT.DES.C/C. RIGHT HAND SIDE COVER	SEITENDECKEL RECHTS PLAQUE LATERAL DROITE AVEC	1 D	
15B		00H00541696	SCTO.TAPA LAT.DR..C/C VERDE SUBCOMP.COPERC.LAT.DES.C/C. RIGHT HAND SIDE COVER	SEITENDECKEL RECHTS PLAQUE LATERAL DROITE AVEC	2 E	
15C		00H00549691	SCTO.TAPA LAT.DR..C/C AZUL SUBCOMP.COPERC.LAT.DES.C/C. RIGHT HAND SIDE COVER	SEITENDECKEL RECHTS PLAQUE LATERAL DROITE AVEC	3 F	
15D		00H00541695	SCTO.TAPA LAT.DR..C/C ROJO SUBCOMP.COPERC.LAT.DES.C/C. RIGHT HAND SIDE COVER	SEITENDECKEL RECHTS PLAQUE LATERAL DROITE AVEC	4 G	
15E		00H00541694	SCTO.TAPA LAT.DR..C/C NEGRA SUBCOMP.COPERC.LAT.DES.C/C. RIGHT HAND SIDE COVER	SEITENDECKEL RECHTS PLAQUE LATERAL DROITE AVEC	5 9 H L	
15F		00H00541692	SCTO.TAPA LAT.DR..C/C VERDE SUBCOMP.COPERC.LAT.DES.C/C. RIGHT HAND SIDE COVER	SEITENDECKEL RECHTS PLAQUE LATERAL DROITE AVEC	6 A I M	
15G		00H00541699	SCTO.TAPA LAT.DR..C/C AZUL SUBCOMP.COPERC.LAT.DES.C/C. RIGHT HAND SIDE COVER	SEITENDECKEL RECHTS PLAQUE LATERAL DROITE AVEC	7 B J N	
15H		00H00541691	SCTO.TAPA LAT.DR..C/C ROJO SUBCOMP.COPERC.LAT.DES.C/C. RIGHT HAND SIDE COVER	SEITENDECKEL RECHTS PLAQUE LATERAL DROITE AVEC	8 C K O	

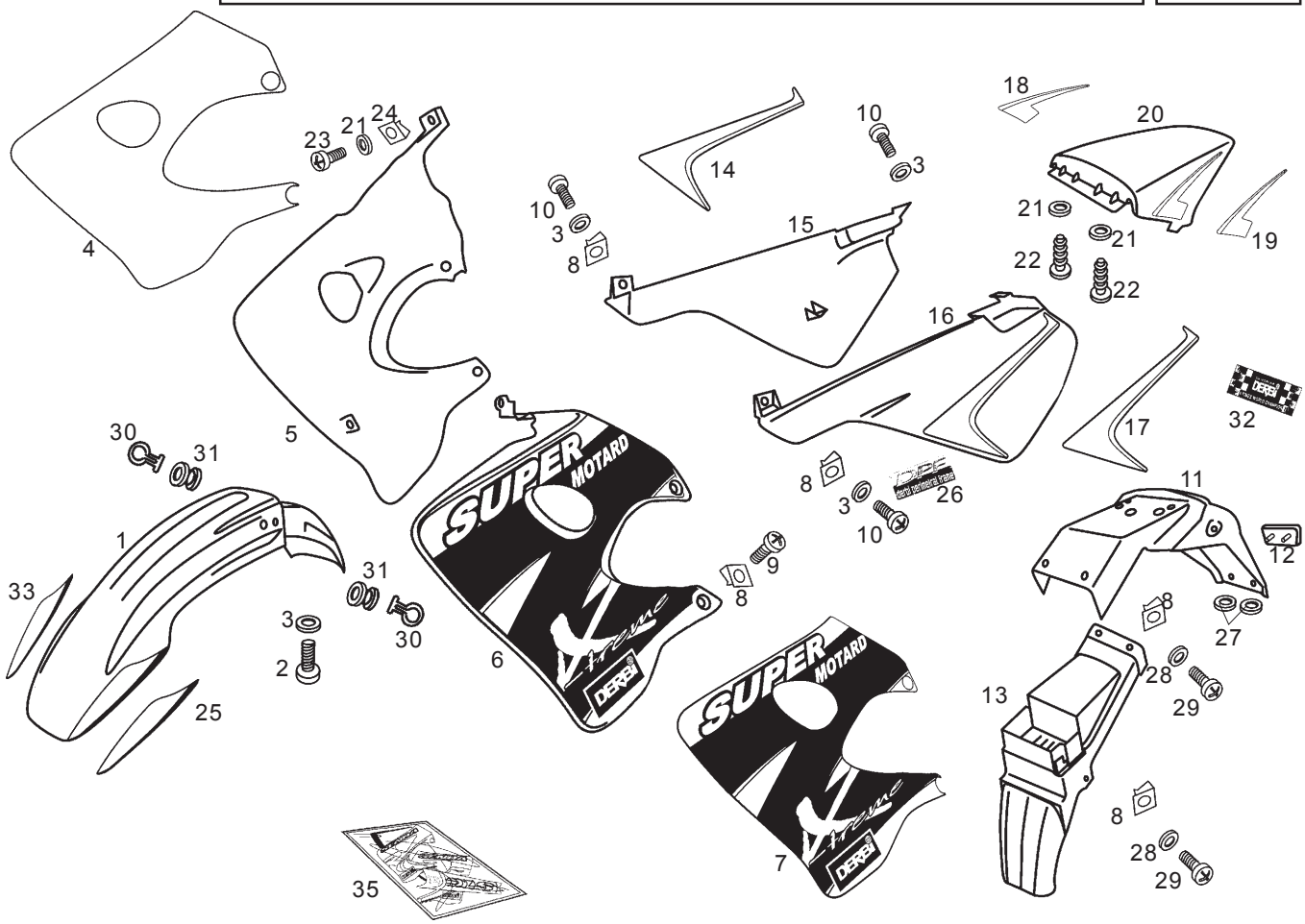

Fig.	Ver.	COD. KOD.	DESCRIPCIÓN DENOMINAZIONE NAME	BEZEICHNUNG DESIGNATION	MOD.	NOTAS NOTES NOTA MITSCHRIFT NOTES
16A		00H00541708	SCTO.TAPA LAT.IZ..C/C NEGRA SUBCOMP.COP.LAT.SIN.C/C. LEFT HAND SIDE COVER	SEITENDECKEL- LINKS FLANC LAT.G.AVEC DECAL	1 D	
16B		00H00541706	SCTO.TAPA LAT.IZ..C/C VERDE SUBCOMP.COP.LAT.SIN.C/C. LEFT HAND SIDE COVER	SEITENDECKEL- LINKS FLANC LAT.G.AVEC DECAL	2 E	
16C		00H00549701	SCTO.TAPA LAT.IZ..C/C AZUL SUBCOMP.COP.LAT.SIN.C/C. LEFT HAND SIDE COVER	SEITENDECKEL- LINKS FLANC LAT.G.AVEC DECAL	3 F	
16D		00H00541705	SCTO.TAPA LAT.IZ..C/C ROJO SUBCOMP.COP.LAT.SIN.C/C. LEFT HAND SIDE COVER	SEITENDECKEL- LINKS FLANC LAT.G.AVEC DECAL	4 G	
16E		00H00541704	SCTO.TAPA LAT.IZ..C/C NEGRA SUBCOMP.COP.LAT.SIN.C/C. LEFT HAND SIDE COVER	SEITENDECKEL- LINKS FLANC LAT.G.AVEC DECAL	5 9 H L	
16F		00H00541702	SCTO.TAPA LAT.IZ..C/C VERDE SUBCOMP.COP.LAT.SIN.C/C. LEFT HAND SIDE COVER	SEITENDECKEL- LINKS FLANC LAT.G.AVEC DECAL	6 A I M	
16G		00H00541709	SCTO.TAPA LAT.IZ..C/C AZUL SUBCOMP.COP.LAT.SIN.C/C. LEFT HAND SIDE COVER	SEITENDECKEL- LINKS FLANC LAT.G.AVEC DECAL	7 B J N	
16H		00H00541701	SCTO.TAPA LAT.IZ..C/C ROJO SUBCOMP.COP.LAT.SIN.C/C. LEFT HAND SIDE COVER	SEITENDECKEL- LINKS FLANC LAT.G.AVEC DECAL	8 C K O	
17A		00H00516644	CALCA POST.TAPA LAT.IZ. NEGRA ADESIVO COPERC.LATERALE SIDE COVER DECAL	AUFKLEBER DECAL LAT.	1 5 9 D H L	
17B		00H00516642	CALCA POST.TAPA LAT.IZ. VERDE ADESIVO COPERC.LATERALE SIDE COVER DECAL	AUFKLEBER DECAL LAT.	2 6 A E I M	
17C		00H00516646	CALCA POST.TAPA LAT.IZ. AZUL ADESIVO COPERC.LATERALE SIDE COVER DECAL	AUFKLEBER DECAL LAT.	3 7 B F J N	

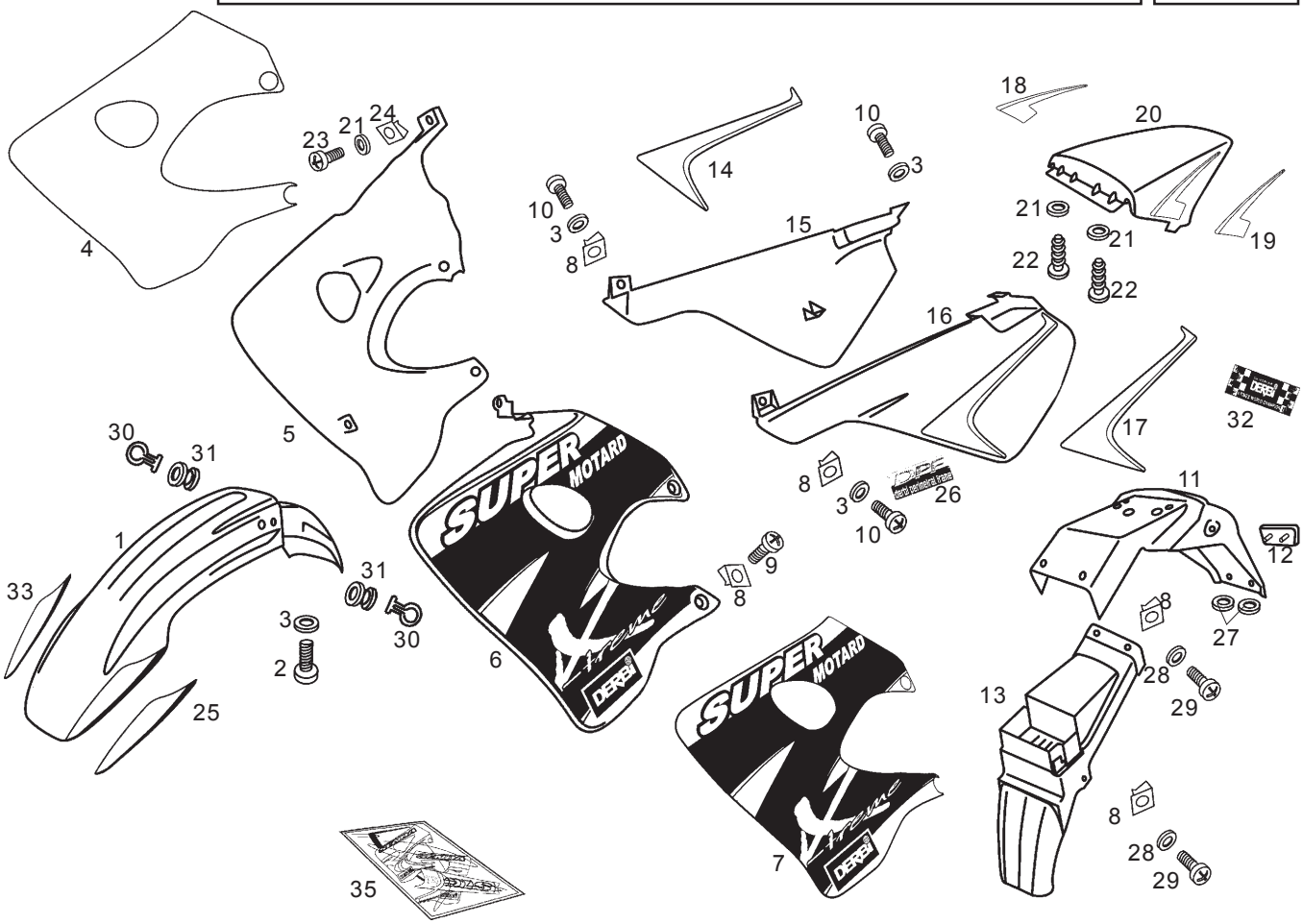

Fig.	Ver.	COD. KOD.	DESCRIPCIÓN DENOMINAZIONE NAME	BEZEICHNUNG DESIGNATION	MOD.	NOTAS NOTES NOTA MITSCHRIFT NOTES
17D		00H00516645	CALCA POST.TAPA LAT.IZ. ROJO ADESIVO COPERC.LATERALE SIDE COVER DECAL	AUFKLEBER DECAL LAT.	4 G	
17E		00H00516641	CALCA POST.TAPA LAT.IZ. ROJO ADESIVO COPERC.LATERALE SIDE COVER DECAL	AUFKLEBER DECAL LAT.	8 C K O	
18A		00H00618604	CALCA DR. COLIN NEGRA ADESIVO DECAL	SCHRIFTZUG ADHESIF	1 5 9 D H L	
18B		00H00618602	CALCA DR. COLIN VERDE ADESIVO DECAL	SCHRIFTZUG ADHESIF	2 6 A E I M	
18C		00H00618606	CALCA DR. COLIN AZUL ADESIVO DECAL	SCHRIFTZUG ADHESIF	3 7 B F J N	
18D		00H00618605	CALCA DR. COLIN ROJO ADESIVO DECAL	SCHRIFTZUG ADHESIF	4 G	
18E		00H00618601	CALCA DR. COLIN ROJO ADESIVO DECAL	SCHRIFTZUG ADHESIF	8 C K O	
19A		00H00618484	CALCA IZ. COLIN NEGRA ADESIVO DECAL	SCHRIFTZUG ADHESIF	1 5 9 D H L	
19B		00H00618482	CALCA IZ. COLIN VERDE ADESIVO DECAL	SCHRIFTZUG ADHESIF	2 6 A E I M	
19C		00H00618486	CALCA IZ. COLIN AZUL ADESIVO DECAL	SCHRIFTZUG ADHESIF	3 7 B F J N	
19D		00H00618485	CALCA IZ. COLIN ROJO ADESIVO DECAL	SCHRIFTZUG ADHESIF	4 G	

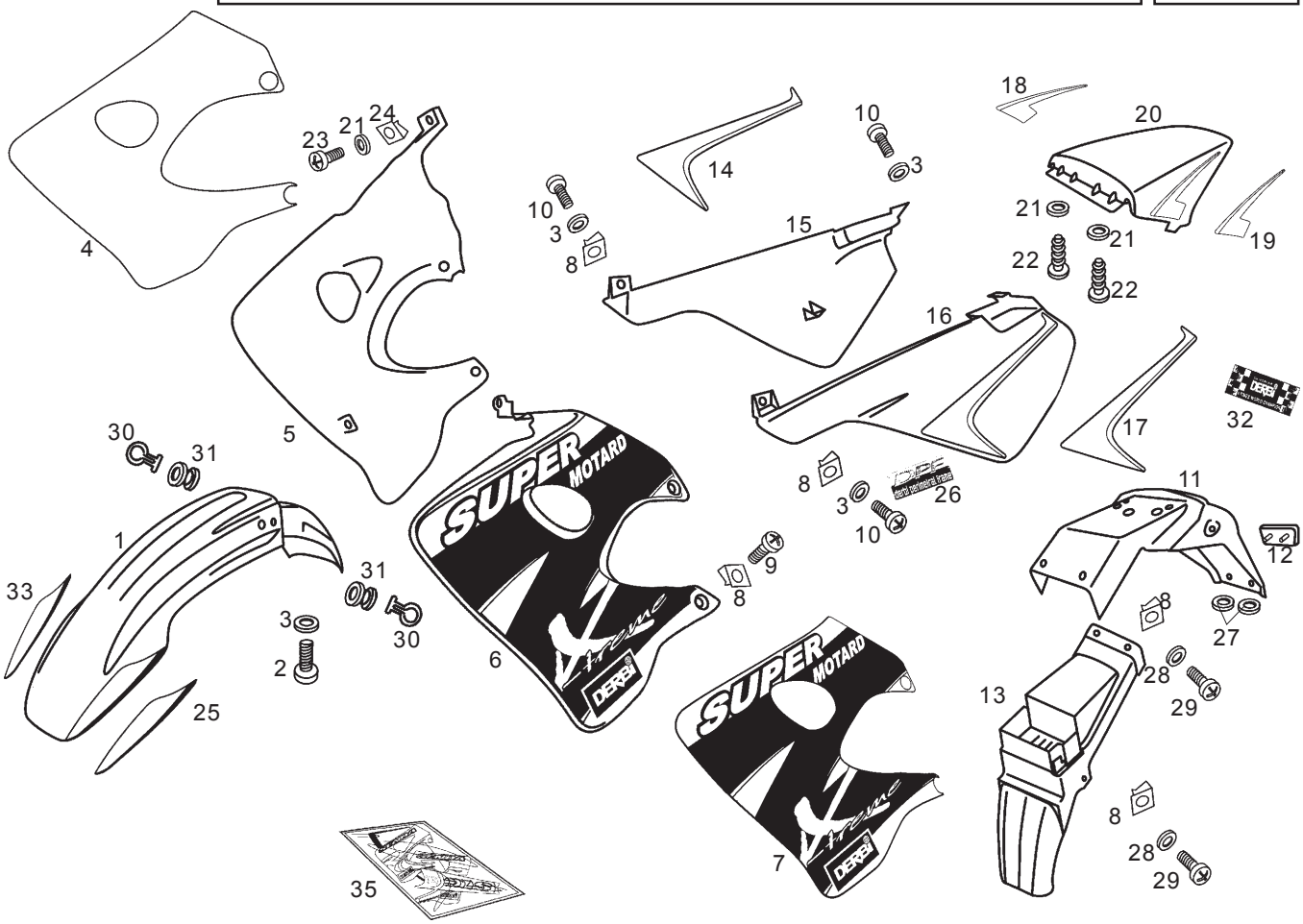

Fig.	Ver.	COD. KOD.	DESCRIPCIÓN DENOMINAZIONE NAME	BEZEICHNUNG DESIGNATION	MOD.	NOTAS NOTES NOTA MITSCHRIFT NOTES
19E		00H00618481	CALCA IZ. COLIN ROJO ADESIVO DECAL	SCHRIFTZUG ADHESIF	8 C K O	
20A		00H04912098	SCTO. COLIN C/C NEGRA COLIN SELLINO SEAT BASE	KOTFLUGEL HINTEN DOSSERET SELLE	1 D	
20B		00H04912096	SCTO. COLIN C/C VERDE COLIN SELLINO SEAT BASE	KOTFLUGEL HINTEN DOSSERET SELLE	2 E	
20C		00H04922091	SCTO. COLIN C/C AZUL COLIN SELLINO SEAT BASE	KOTFLUGEL HINTEN DOSSERET SELLE	3 F	
20D		00H04912095	SCTO. COLIN C/C ROJO COLIN SELLINO SEAT BASE	KOTFLUGEL HINTEN DOSSERET SELLE	4 G	
20E		00H04912094	SCTO. COLIN C/C NEGRA COLIN SELLINO SEAT BASE	KOTFLUGEL HINTEN DOSSERET SELLE	5 9 H L	
20F		00H04912092	SCTO. COLIN C/C VERDE COLIN SELLINO SEAT BASE	KOTFLUGEL HINTEN DOSSERET SELLE	6 A I M	
20G		00H04912099	SCTO. COLIN C/C AZUL COLIN SELLINO SEAT BASE	KOTFLUGEL HINTEN DOSSERET SELLE	7 B J N	
20H		00H04912091	SCTO. COLIN C/C ROJO COLIN SELLINO SEAT BASE	KOTFLUGEL HINTEN DOSSERET SELLE	8 C K O	
21A		00000031050	ARAND. PL. Ø 5 RONDELLA Ø 5 WASHER Ø 5	ROND.PLATE MECANISEE D.5.DI SCHEIBE D.5 DIN-125	1 2 3 4 5 6 7 8 9 A B C D E F G H I J K L M N O	
22A		00011051601	TOR. AUTRRCTE. 5 X16 VITE AUTOFILETTANTE 5 X 16 SELF-TAPPING SCREW	VIS TARAUD 5,1X16 NOIR CL89H SELF-TAPPING SCREW	1 2 3 4 5 6 7 8 9 A B C D E F G H I J K L M N O	

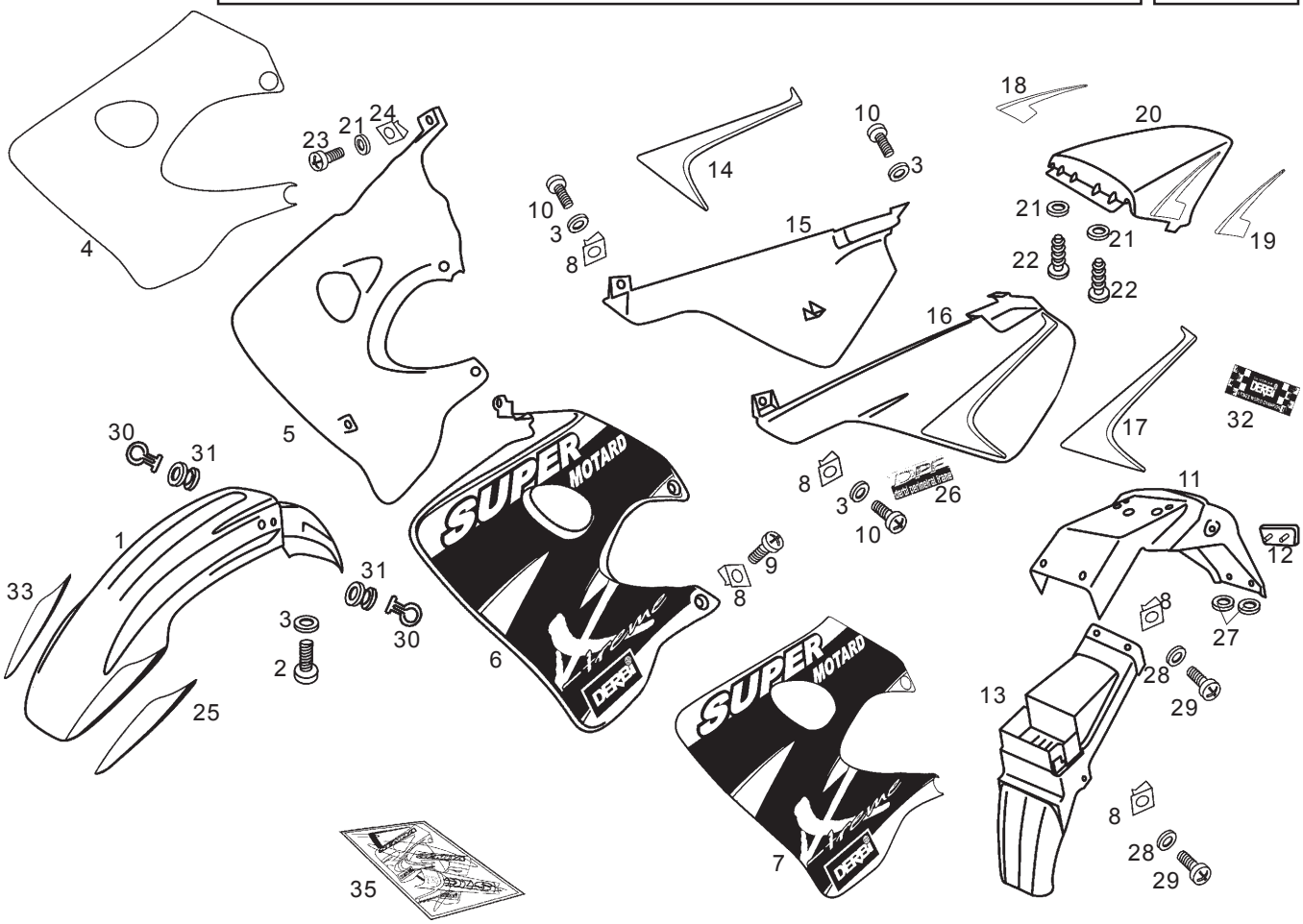

Fig.	Ver.	COD. KOD.	DESCRIPCIÓN DENOMINAZIONE NAME	BEZEICHNUNG DESIGNATION	MOD.	NOTAS NOTES NOTA MITSCHRIFT NOTES
23A		00012152000	TOR. C/RED CRUZ 5 X 20 VITE CROCE 5 X 20 SCREW 5 X 20	VIS CRUCIFORME5M80X20DIN798 SCHRAUBE	1 2 3 4 5 6 7 8 9 A B C D E F G H I J K L M N O	
24A		00G04401462	TCA. FIJ. ESC. FRONTAL PADO NUT	ECROU MUTTER	1 2 3 4 5 6 7 8 9 A B C D E F G H I J K L M N O	
25A		00H00702264	CALCA GUARDABARROS IZ. NEGRA ADESIVO DECAL	SCHRIFTZUG ADHESIF	1 5 9 D H L	
25B		00H00702262	CALCA GUARDABARROS IZ. VERDE ADESIVO DECAL	SCHRIFTZUG ADHESIF	2 6 A E I M	
25C		00H00702263	CALCA GUARDABARROS IZ. AZUL ADESIVO DECAL	SCHRIFTZUG ADHESIF	3 7 B F J N	
25D		00H00702265	CALCA GUARDABARROS IZ. ROJA ADESIVO DECAL	SCHRIFTZUG ADHESIF	4 G	
25E		00H00702261	CALCA GUARDABARROS IZ. ROJA ADESIVO DECAL	SCHRIFTZUG ADHESIF	8 C K O	
26A		00H02200021	CALCA DPF ADESIVO DECAL	ADHESIF SCHRIFTZUG	2 3 4 6 7 8 A B C E F G I J K M N O	
26B		00H02200022	CALCA DPF ADESIVO DECAL	ADHESIF SCHRIFTZUG	1 5 9 D H L	
27A		00G06300671	ARAND. FIJ. SUPLMTO. TR. CUADRO RONDELLA WASHER	RONDELLE SCHEIBE	1 2 3 4 5 6 7 8 9 A B C D E F G H I J K L M N O	

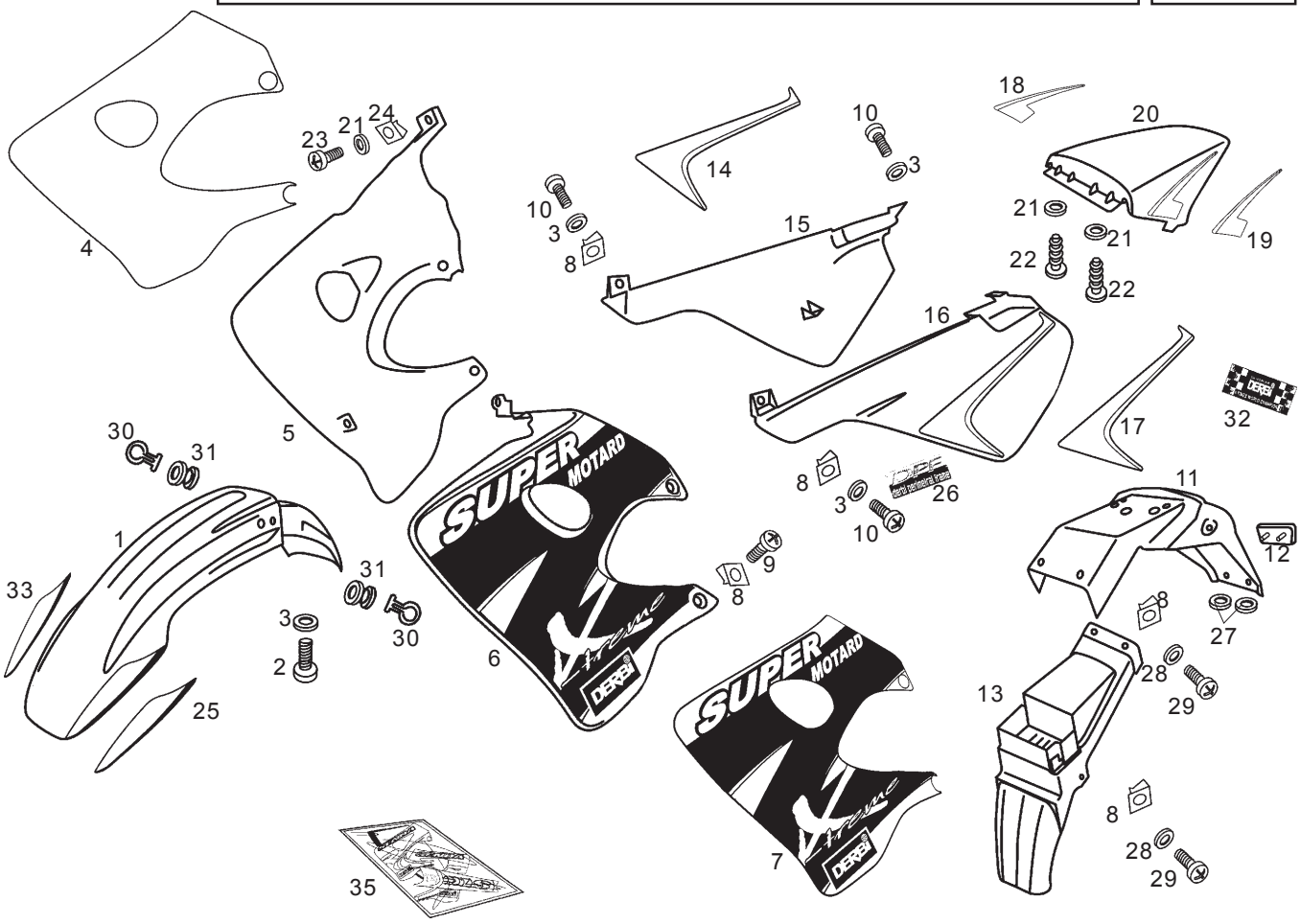

Fig.	Ver.	COD. KOD.	DESCRIPCIÓN DENOMINAZIONE NAME	BEZEICHNUNG DESIGNATION	MOD.	NOTAS NOTES NOTA MITSCHRIFT NOTES
28A		00000031060	ARAND.PLANA MECANIZ.D.6.DIN125 RONDELLA PIATTA D6 MACHINED FLAT WASHER D6 DIN-12	ROND. PLATE MECANISEE D6DIN SCHEIBE D.6	1 2 3 4 5 6 7 8 9 A B C D E F G H I J K L M N O	
29A		00012161600	TOR.C/CRUZ.NG.6M100X16.D7985-Z VITE TESTA CROCE NERA PHILIPS SCREW	VIS T.CROIX NOIR 6M100X16 D SCHRAUBE 6M100X16 D-7985	1 2 3 4 5 6 7 8 9 A B C D E F G H I J K L M N O	
30A		00H02201591	GUIA CABLES FRENO GUIDA CAVI CABLE GUIAE	SOUS-EN.SUP.FIX.TUYAU FREIN HALTER F. BEF. BREMSSCHLAU	1 2 3 4 5 6 7 8 9 A B C D E F G H I J K L M N O	
31A		00D01500021	PASACABLES INST.GUARDABARROS PORTACAVI PARAFANGO GROMMET	CAOUTCHOUC PASSE-CABLE GUMMI	1 2 3 4 5 6 7 8 9 A B C D E F G H I J K L M N O	
32A		00H04900231	CALCA DERBI 8 VECES ADESIVO DECAL	ADHESIF SCHRIFTZUG	1 2 3 4 5 6 7 8 9 A B C D E F G H I J K L M N O	
33A		00H00709254	CALCA GUARDABARROS DR. NEGRA ADESIVO DECAL	SCHRIFTZUG ADHESIF	1 5 9 D H L	
33B		00H00709252	CALCA GUARDABARROS DR. VERDE ADESIVO DECAL	SCHRIFTZUG ADHESIF	2 6 A E I M	
33C		00H00709253	CALCA GUARDABARROS DR. AZUL ADESIVO DECAL	SCHRIFTZUG ADHESIF	3 7 B F J N	
33D		00H00709255	CALCA GUARDABARROS DR. ROJA ADESIVO DECAL	SCHRIFTZUG ADHESIF	4 G	
33E		00H00709251	CALCA GUARDABARROS DR. ROJA ADESIVO DECAL	SCHRIFTZUG ADHESIF	8 C K O	

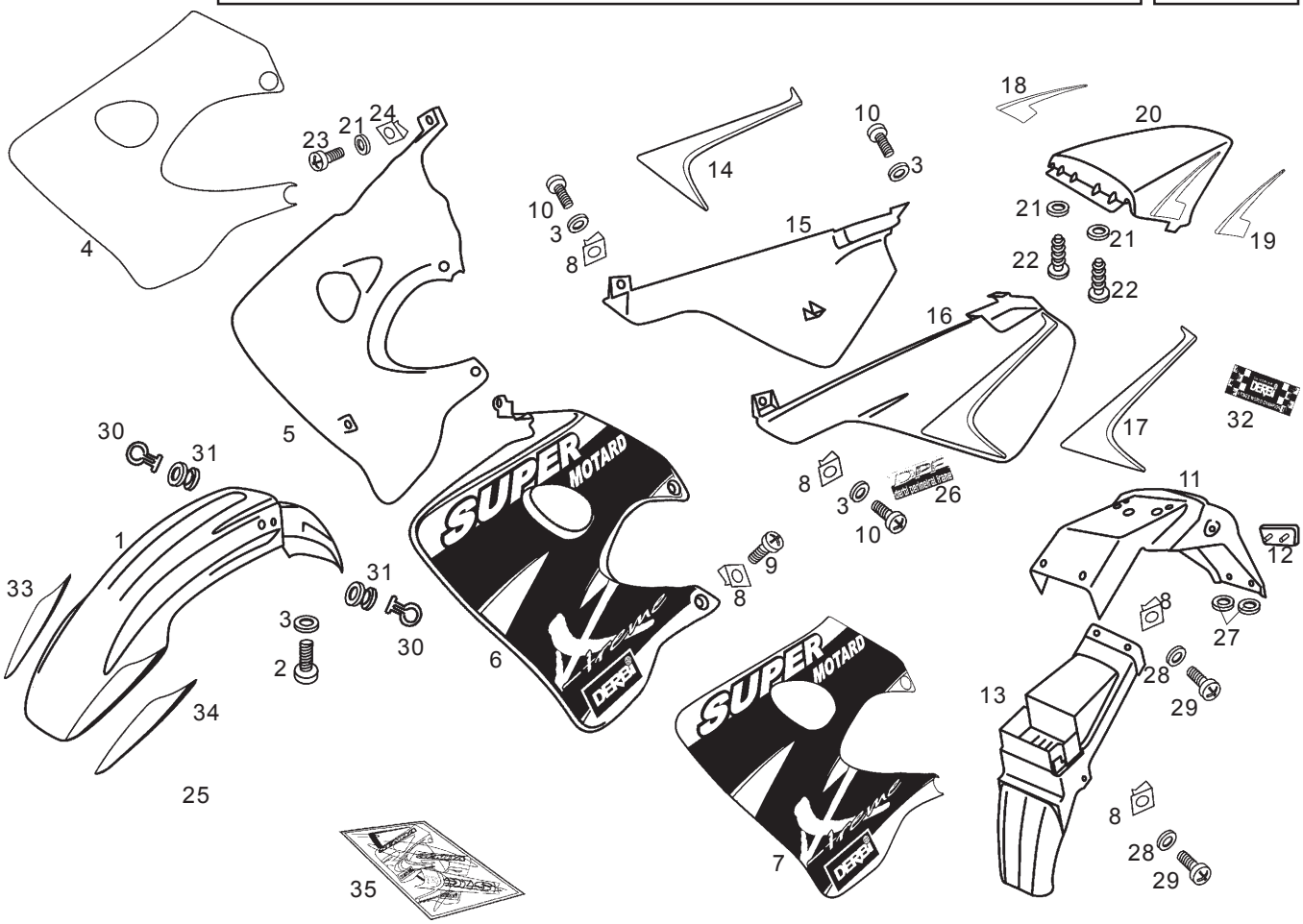

Fig.	Ver.	COD. KOD.	DESCRIPCIÓN DENOMINAZIONE NAME	BEZEICHNUNG DESIGNATION	MOD.	NOTAS NOTES NOTA MITSCHRIFT NOTES
ACCESORIOS OPCIONALES / ACCESORI OPCIONALE / OPTIONAL ACCESORIES / WERKZEUG / OTILS FOURNIS						
35A		00H05144654	R-JUEGO CALCAS NEGRO COMPL.ADESIVI DECALS ASSY	AUFKLEBERSATZ JEU ADHESIF	1 5 9 D H L	
35B		00H05144652	R-JUEGO CALCAS VERDE COMPL.ADESIVI DECALS ASSY	AUFKLEBERSATZ JEU ADHESIF	2 6 A E I M	
35C		00H05144653	R-JUEGO CALCAS AZUL COMPL.ADESIVI DECALS ASSY	AUFKLEBERSATZ JEU ADHESIF	3 7 B F J N	
35D		00H05144655	R-JUEGO CALCAS ROJO COMPL.ADESIVI DECALS ASSY	AUFKLEBERSATZ JEU ADHESIF	4 G	
35E		00H05144651	R-JUEGO CALCAS ROJO COMPL.ADESIVI DECALS ASSY	AUFKLEBERSATZ JEU ADHESIF	8 C K O	

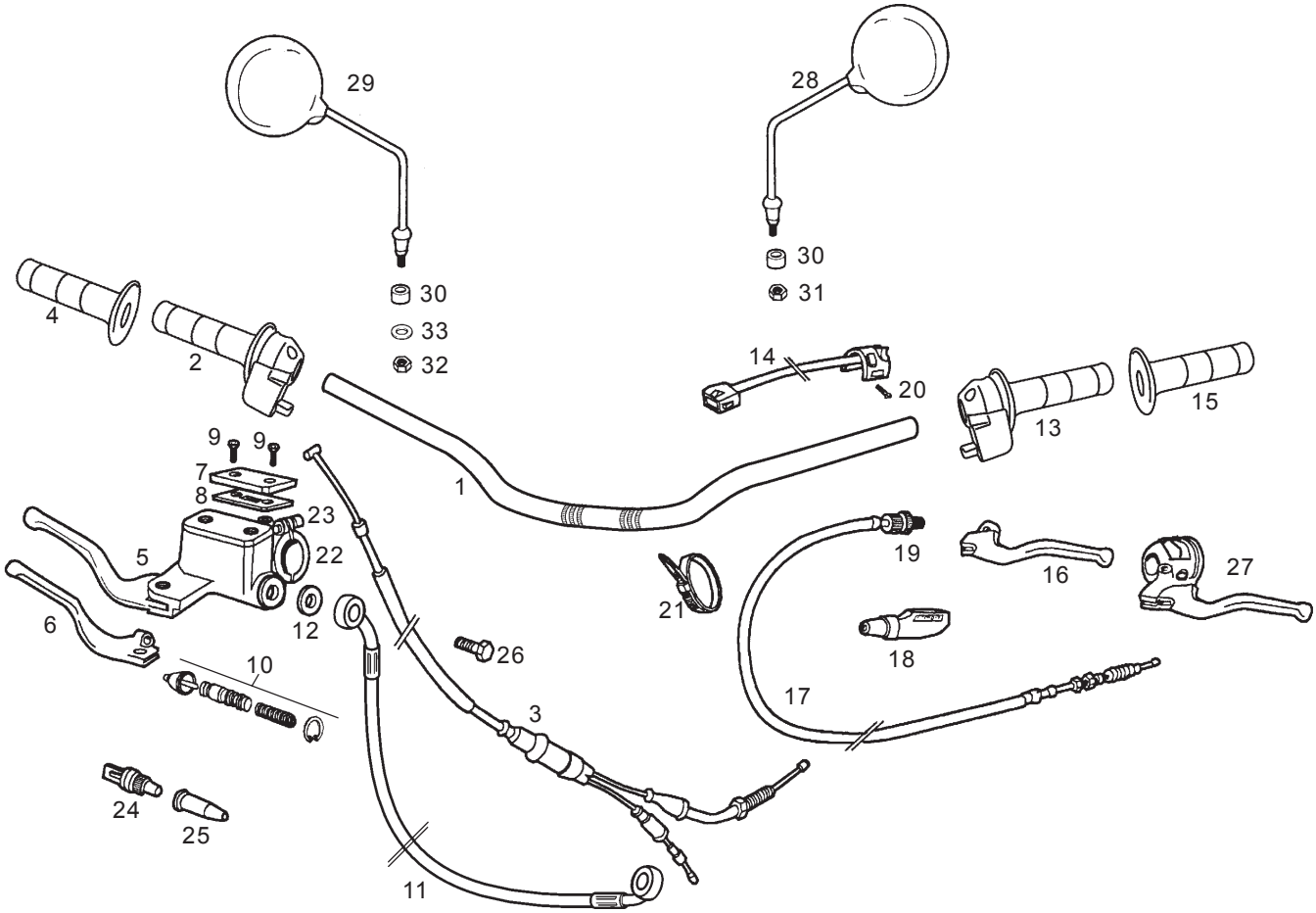

Fig.	Ver.	COD. KOD.	DESCRIPCIÓN DENOMINAZIONE NAME	BEZEICHNUNG DESIGNATION	MOD.	NOTAS NOTES NOTA MITSCHRIFT NOTES
01A		00H00908011	SCTO. MANILLAR MANUBRIO HANDLEVAR ASSY	LENKER GUIDON	1 2 3 4 5 6 7 8 9 A B C D E F G H I J K L M N O	
02A		00H02101621	CTO. PUÑO GAS MANOPOLA ACCELERATOR THROTTLE GRIP ASSEMBLY	GASGRIFF POIGNEE DE GAZ COMPLETE	1 2 3 4 5 6 7 8 9 A B C D E F G H I J K L M N O	
03A		00H00916171	SCTO.CABLE FUNDA GAS CAVO-FODERO ACCELERA CABLE ASSY TRHOTTLE	GASKABEL GAINE ET CABLE DE GAZ	1 2 3 4 5 6 7 8 9 A B C D E F G H I J K L M N O	
04A		00H00930091	R-EMPUÑADURA GAS R-MANOPOLA ACCELERATORE V.W.CH GRIP, THROTTLE	GRIFF CAOUT.DE PIGNEE GAZ	1 2 3 4 5 6 7 8 9 A B C D E F G H I J K L M N O	
05A		00G02102081	R-CTO. MANDO FRENO DTRO. R-COMANDO FRENO FRONT BRAKE LEVER/MASTER CYLIN	REP.-SATZ F. PUMPE R-ENSEM.KIT REPAR. POMPE SE	1 2 3 4 5 6 7 8 9 A B C D E F G H I J K L M N O	
06A		00F00902291	R-MANETA FRENO TRASERO MANOPOLA FRENO BRAKE LEVER	BREMSHEBEL KOMPL. MANETE DU FREIN AVANT	1 2 3 4 5 6 7 8 9 A B C D E F G H I J K L M N O	
07A		00H02100191	R-TAPA DEPOSITO LIQ. FRENO DT. COPERCHIO SERBATOIO LIQUIDO BRAKE FLUID RESERVOIR CAP	BREMSFLUESSIGKEITSBEHAELTE R-COUV.RESER.LIQ.FREIN AVAN	1 2 3 4 5 6 7 8 9 A B C D E F G H I J K L M N O	
08A		00H02100861	R-JUNTA TAPA DEP. LIQ. FRENO GUARNIZIONE COPERCHIO BRAKE FLUID RESERVOIR CAP SEAL	BREMSCECKELDICHTUNG R-JOINT COUV.RES.LIQ.FR.AV.	1 2 3 4 5 6 7 8 9 A B C D E F G H I J K L M N O	
09A		00014041200	TORN. C/AR. CRUZ NG. 4 M 80 X 12 VITE TESTA SVASATA CROCE NERO COUNTERSUNK PHILIPS SCREW	SCHRAUBE 4M80X12.D-965 BOULON T.NOYEE CR.N.4M80X12	1 2 3 4 5 6 7 8 9 A B C D E F G H I J K L M N O	
10A		00D02120811	R-KIT BOMBA FR. DT. KIT RIPARAZIONE FRONT BRAKE MASTER CYLINDER	REP.-SATZ F. PUMPE R-ENSEM.KIT REPAR. POMPE SE	1 2 3 4 5 6 7 8 9 A B C D E F G H I J K L M N O	
11A		00H00917751	SCTO.TUBO LIQ.FR.DT.S.R SUBCOMP.TUBO LIQ.FRE. BRAKE FLUID TUBE	BREMSSSCHLAUCH FLEXIBLE DE FREIN AVANT	1 2 3 4 5 6 7 8 9 A B C D E F G H I J K L M N O	

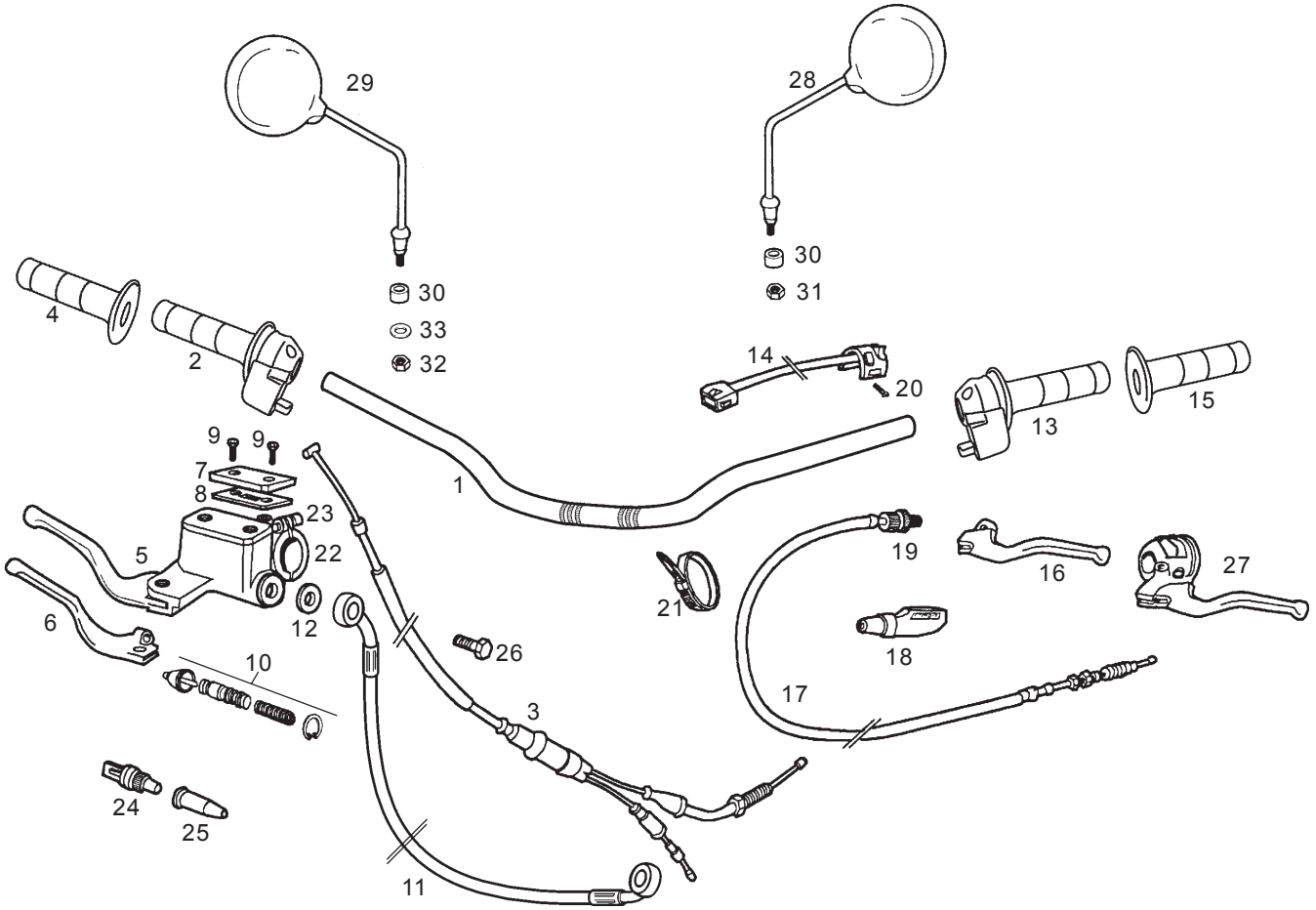

Fig.	Ver.	COD. KOD.	DESCRIPCIÓN DENOMINAZIONE NAME	BEZEICHNUNG DESIGNATION	MOD.	NOTAS NOTES NOTA MITSCHRIFT NOTES
12A		00006321040	ARAND. JUNTA RADORD RONDELLA GUARNIZIONE RACCORDO CONNECTOR GASKET WASHER	DICHTRING RONDELLE DE JOINT RACCORD	1 2 3 4 5 6 7 8 9 A B C D E F G H I J K L M N O	
13A		00H01007141	CTO.PUÑO LUZ MANOPOLA LUCE LIGHT SWINTCH ASSY	LICHTSCHALTER INVERSEUR AVEC CABLE	1 2 3 4 5 6 7 8 9 A B C D E F G H I J K L M N O	
14A		00H02304381	CTO. CONMUT. LUCES C/CABLE CONMUTATORE LUCI SWITCH	LICHTSCHALTER INVERSEUR AVEC CABLE	1 2 3 4 5 6 7 8 9 A B C D E F G H I J K L M N O	
15A		00H00930071	R-EMPUÑADURA PUÑO LUZ R-MANOPOLA FRENO POSTERIORE 13 GRIP, THROTTLE	GRIFF CAOUT.DE PIGNEE GAZ	1 2 3 4 5 6 7 8 9 A B C D E F G H I J K L M N O	
16A		00D00940291	R-MAN. EMBRAGUE LEVIER EMBRAYAGE CLUTCH LEVER	KUPPLUNGSHEBEL LEVIER EMBRAYAGE	1 2 3 4 5 6 7 8 9 A B C D E F G H I J K L M N O	
16A	01	00F00910291	R-MAN. EMBRAGUE LEVIER EMBRAYAGE CLUTCH LEVER	KUPPLUNGSHEBEL LEVIER EMBRAYAGE	1 2 3 4 5 6 7 8 9 A B C D E F G H I J K L M N O	
17A		00H00902301	SCTO.CABLE-FUNDA EMBRG.. CAVO-GUAINA FRIZ. CLUTCH COVER AND CAB.SUB.ASSY.	KUPPLUNGSZUG GAINE ET CABLE DIEMBRAYAGE	1 2 3 4 5 6 7 8 9 A B C D E F G H I J K L M N O	
17A	01	00H00907301	SCTO.CABLE-FUNDA EMBRG.. CAVO-GUAINA FRIZ. CLUTCH COVER AND CAB.SUB.ASSY.	KUPPLUNGSZUG GAINE ET CABLE DIEMBRAYAGE	1 2 3 4 5 6 7 8 9 A B C D E F G H I J K L M N O	
18A		00H02101011	PROTECTOR MANETA EMBRAGUE PROTETTORE LEVA FRIZIONE SD- CLUTCH LEVER PROTECTOR	GUMMIKAPPE PROTEGE LEVIER EMBRAY.	1 2 3 4 5 6 7 8 9 A B C D E F G H I J K L M N O	
19A		00H00900351	R-CTO. TENS. CABL. EMB. TENSORE CABO CLUTCH CABLE TIGHTENING DEVIC	SCHELLE COLLIER FIX ELIERIE	1 2 3 4 5 6 7 8 9 A B C D E F G H I J K L M N O	
20A		00000012508	TOR.C/RED.CRUZ 5M80X8 VITE TONDO CROCE 5M80X8 SCREW 5M80X8	INBUSSCHRAUBE MOTOR BEFEST VIS 5M80X8	1 2 3 4 5 6 7 8 9 A B C D E F G H I J K L M N O	

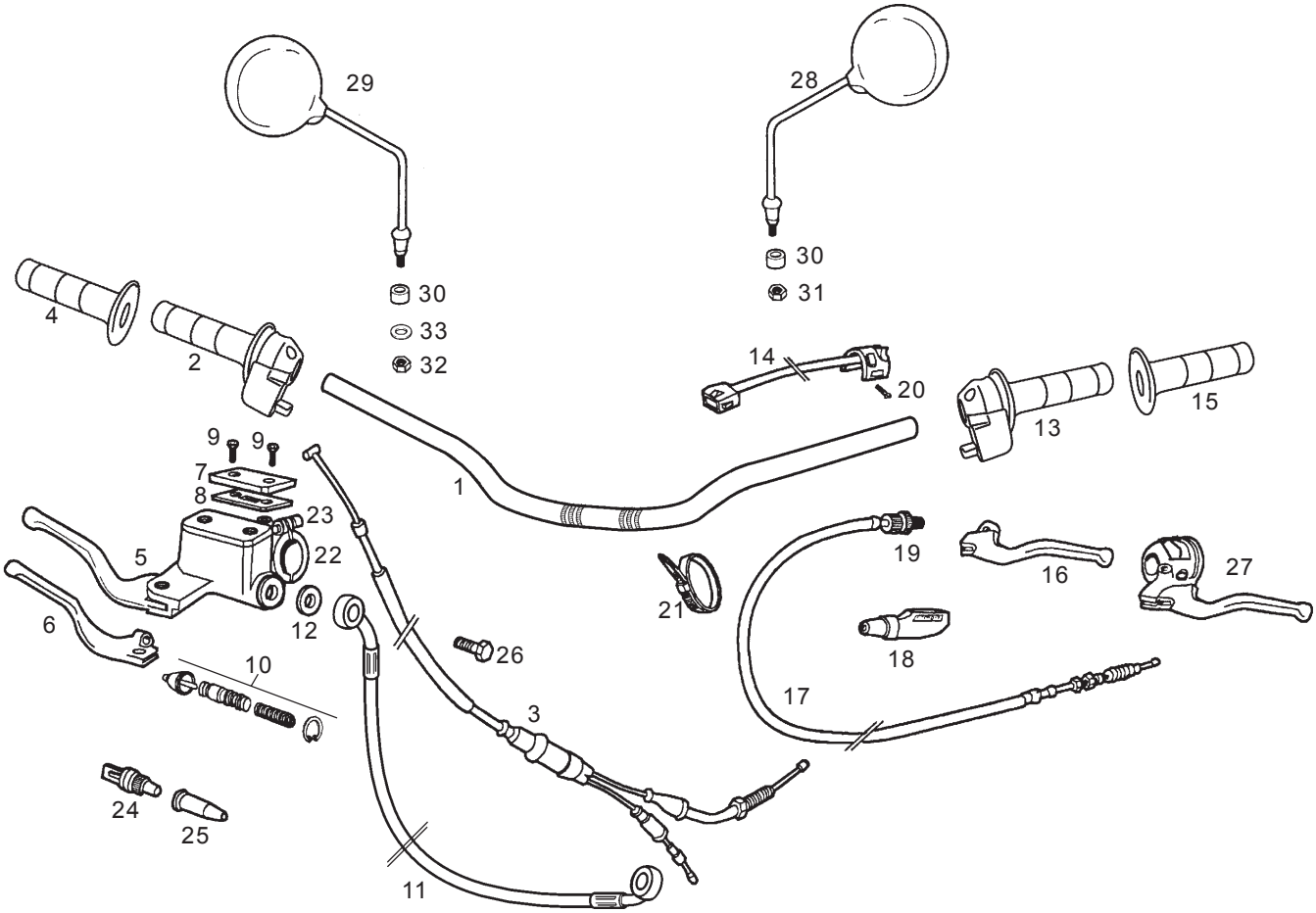

Fig.	Ver.	COD. KOD.	DESCRIPCIÓN DENOMINAZIONE NAME	BEZEICHNUNG DESIGNATION	MOD.	NOTAS NOTES NOTA MITSCHRIFT NOTES
21A		00A00900531	BRIDA UNECABLES NEGRA FLANGIA UNIONE CAVI BLACK CABLE TIE	KABELBINDER COLLIER	1 2 3 4 5 6 7 8 9 A B C D E F G H I J K L M N O	
22A		00D02100901	R-BRIDA FIJ. MANDO FRENO DT. CAVALLOTO FISSAGIO POMPA CLAMP	BEF.-SCHELLE ENTRETOISE	1 2 3 4 5 6 7 8 9 A B C D E F G H I J K L M N O	
23A		00000004620	TORN. C/ALLEN 6M100 X 20 VITE TESTA ALLEN 6M 100X20 ALLEN SCREN 6M100X20	INBUSSCHRAUBE 6M100X20. VIS T.CREUSE 6M100X20.D-912	1 2 3 4 5 6 7 8 9 A B C D E F G H I J K L M N O	
24A		00D01000701	INTERRUP.MANDO STOP. INTERRUTTORE STOP SWITCH, STOP LIGHT	STOPCHALTER VO. INTERRUPTEUR COMMANDE STOP	1 2 3 4 5 6 7 8 9 A B C D E F G H I J K L M N O	
25A		00005010760	CAPUCH.INTERRUP.STOP.NG. CAPPUCCIO INTERRUTTORE STOP NE RUBBER COVER,STOP LIGHT SWITCH	GUMMISCHUTZ STOPLICHTSCHAL CAPUCHON	1 2 3 4 5 6 7 8 9 A B C D E F G H I J K L M N O	
26A		00006309260	RACORD TUBO HIDRAULICO RACCORDO TUBO IDRAULICO HYDRAULIC TUBE CONNECTOR	STUTZEN HIDRAULIKLEITUNG RACCORD TUYAU HYDRAULIQUE	1 2 3 4 5 6 7 8 9 A B C D E F G H I J K L M N O	
27A		00H02104611	CTO. PORTAM. IZQ. SDA RI00 PORTAMANOPOLA SINIST LEFT LEVER BRACKET	BREMSHEBEL LINKS KOMPLETT ENS. PORTE-MANETTE GAUCHE	1 2 3 4 5 6 7 8 9 A B C D E F G H I J K L M N O	
27A	01	00H02105611	CTO. PORTAM. IZQ. SDA RI00 PORTAMANOPOLA SINIST LEFT LEVER BRACKET	BREMSHEBEL LINKS KOMPLETT ENS. PORTE-MANETTE GAUCHE	1 2 3 4 5 6 7 8 9 A B C D E F G H I J K L M N O	
28A		00H02205671	CTO. ESPEJO RETROVISOR SPECCHIETO RETROVISO REAR MIRROW	SPIEGEL MIRROIR RETROVISEUR	1 2 3 4 5 6 7 8 9 A B C D E F G H I J K L M N O	
29A		00D02200671	CTO. ESPEJO RETROVISOR SPECCHIETO RETROVISO REAR MIRROW	SPIEGEL MIRROIR RETROVISEUR	5 6 7 8 9 A B C H I J K L M N O	
30A		00G00800261	CASQ.GIRO PATA CABALLETE.VAMOS GHIERA SNODO ZAMPA CAVALLETTO SPACER	DISTANZHULSE ENTRETOISE	1 2 3 4 5 6 7 8 9 A B C D E F G H I J K L M N O	

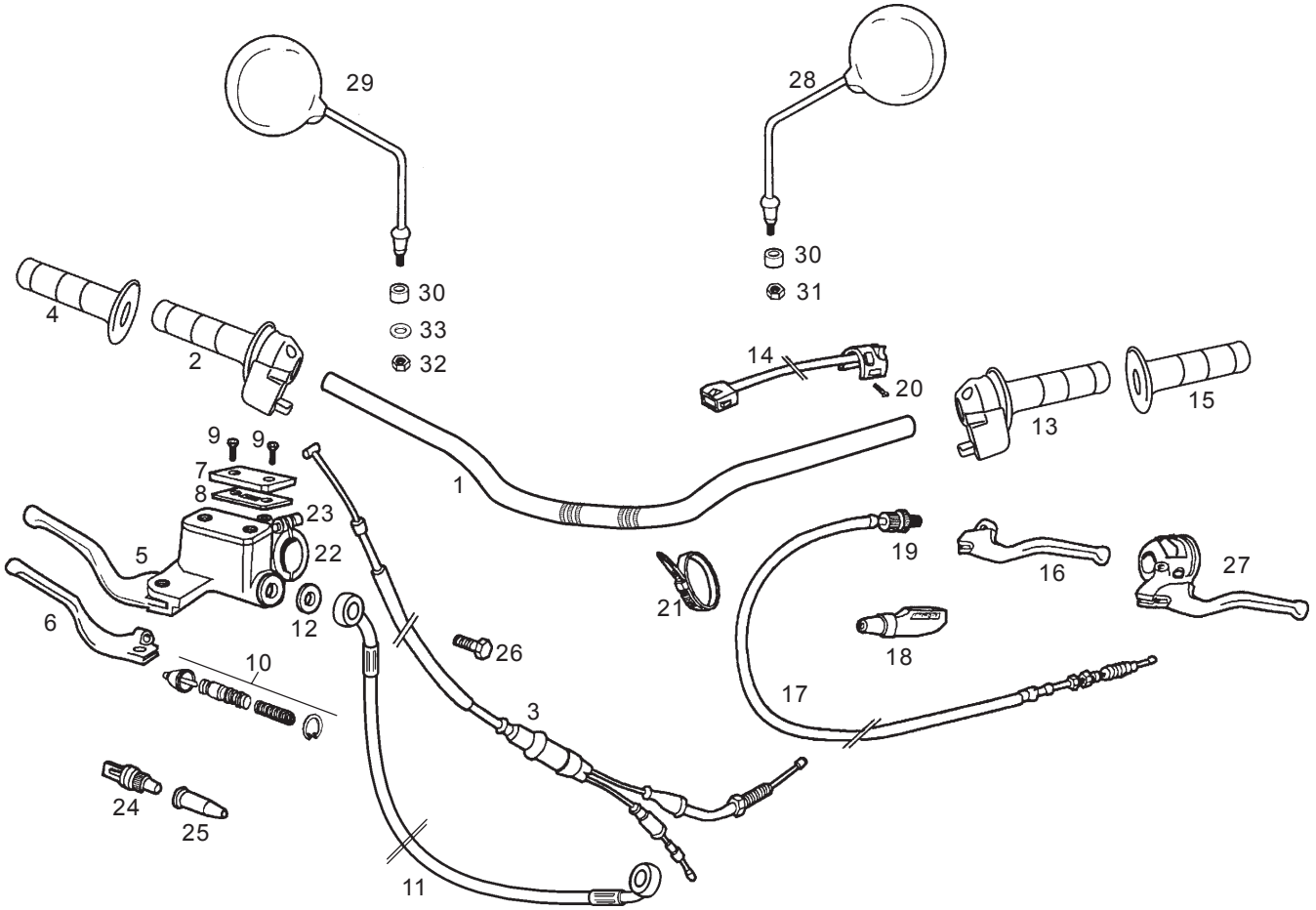

Fig.	Ver.	COD. KOD.	DESCRIPCIÓN DENOMINAZIONE NAME	BEZEICHNUNG DESIGNATION	MOD.	NOTAS NOTES NOTA MITSCHRIFT NOTES
31A		00000023080	TCA.AUTOBLOC. 8M125. DIN-982. DADO AUTOBLOCCANTE 8M125 SELF-LOCKING NUT M8	MUTTER SELBSTS ECROU INDESSERABLE 8M125.DI	5 6 7 8 9 A B C H I J K L M N O	
32A		00000021080	TCA.AUTOBLOC. DADO AUTOBLOCCANTE SELF-LOCKING NUT	MUTTER SELBSTS ECROU INDESSERABLE	5 6 7 8 9 A B C H I J K L M N O	
33A		00000031080	ARANDELA RONDELLA WASHER	SCHEIBE RONDELLE	5 6 7 8 9 A B C H I J K L M N O	

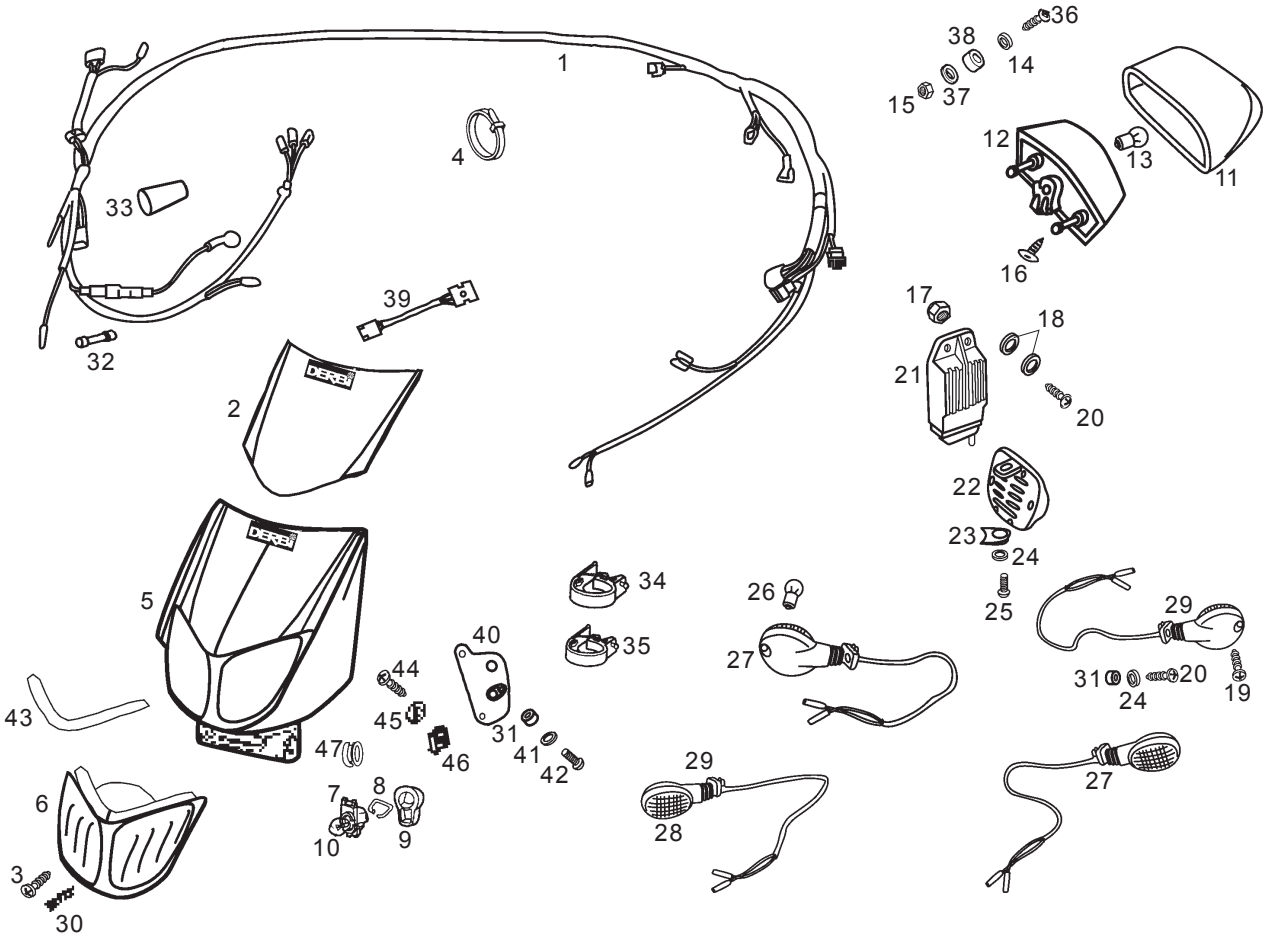

Fig.	Ver.	COD. KOD.	DESCRIPCIÓN DENOMINAZIONE NAME	BEZEICHNUNG DESIGNATION	MOD.	NOTAS NOTES NOTA MITSCHRIFT NOTES
01A	01	00H01029301	CTO.INSTAL.ELECT.SD X-TR/DRD COMPLESSO IMPIANTO ELETTRICO ELECTRICAL INSTALATIONS ASSY.	KOBELBAUM FAISCEAU ELECTRIQUE	H J	00H00027F381 00H00027F341
01A	02	00H01027301	CTO.INSTAL.ELECT.SD-R 00 GMM COMPLESSO IMPIANTO ELETTRICO ELECTRICAL INSTALATIONS ASSY.	KOBELBAUM FAISCEAU ELECTRIQUE	1 2 3 4 5 6 7 8 9 A B C D E F G H I J K L M N O	3H212325
02A		00H01526324	CALCA CARCASA NEGRA ADESIVO PLACCA FRONTALE FORNT PLATE DECAL	CAUFKLEVER DECAL DE PLAQUE PHARE	1 5 9 D H L	
02B		00H01526322	CALCA CARCASA VERDE ADESIVO PLACCA FRONTALE FORNT PLATE DECAL	CAUFKLEVER DECAL DE PLAQUE PHARE	2 6 A E I M	
02C		00H01526323	CALCA CARCASA AZUL ADESIVO PLACCA FRONTALE FORNT PLATE DECAL	CAUFKLEVER DECAL DE PLAQUE PHARE	3 7 B F J N	
02D		00H01526325	CALCA CARCASA ROJO ADESIVO PLACCA FRONTALE FORNT PLATE DECAL	CAUFKLEVER DECAL DE PLAQUE PHARE	4 G	
02E		00H01526321	CALCA CARCASA ROJO ADESIVO PLACCA FRONTALE FORNT PLATE DECAL	CAUFKLEVER DECAL DE PLAQUE PHARE	8 C K O	
03A		00012045000	TOR. C/RED.CRUZ 4M70X50 BOUT M5 X 50 SCREW M4 X 50	SCREW M4X50 VIS 4M70X50	1 2 3 4 5 6 7 8 9 A B C D E F G H I J K L M N O	
04A		00D00900531	BRIDA UNECABLES NEGRA FLANGIA UNIONE CAVI BLACK CABLE TIE	KABELBINDER COLLIER	1 2 3 4 5 6 7 8 9 A B C D E F G H I J K L M N O	
05A		00H02229378	SCTO.CARC.FARO NEGRA SUBCOMP.CARC.FARO C/C. HEADLIGHT CUSING SUB-ASSEMBLY	SCHEINWERFERVERKLEIDUNG PLAQUE PHARE	1 D	
05B		00H02229376	SCTO.CARC.FARO VERDE SUBCOMP.CARC.FARO C/C. HEADLIGHT CUSING SUB-ASSEMBLY	SCHEINWERFERVERKLEIDUNG PLAQUE PHARE	2 E	

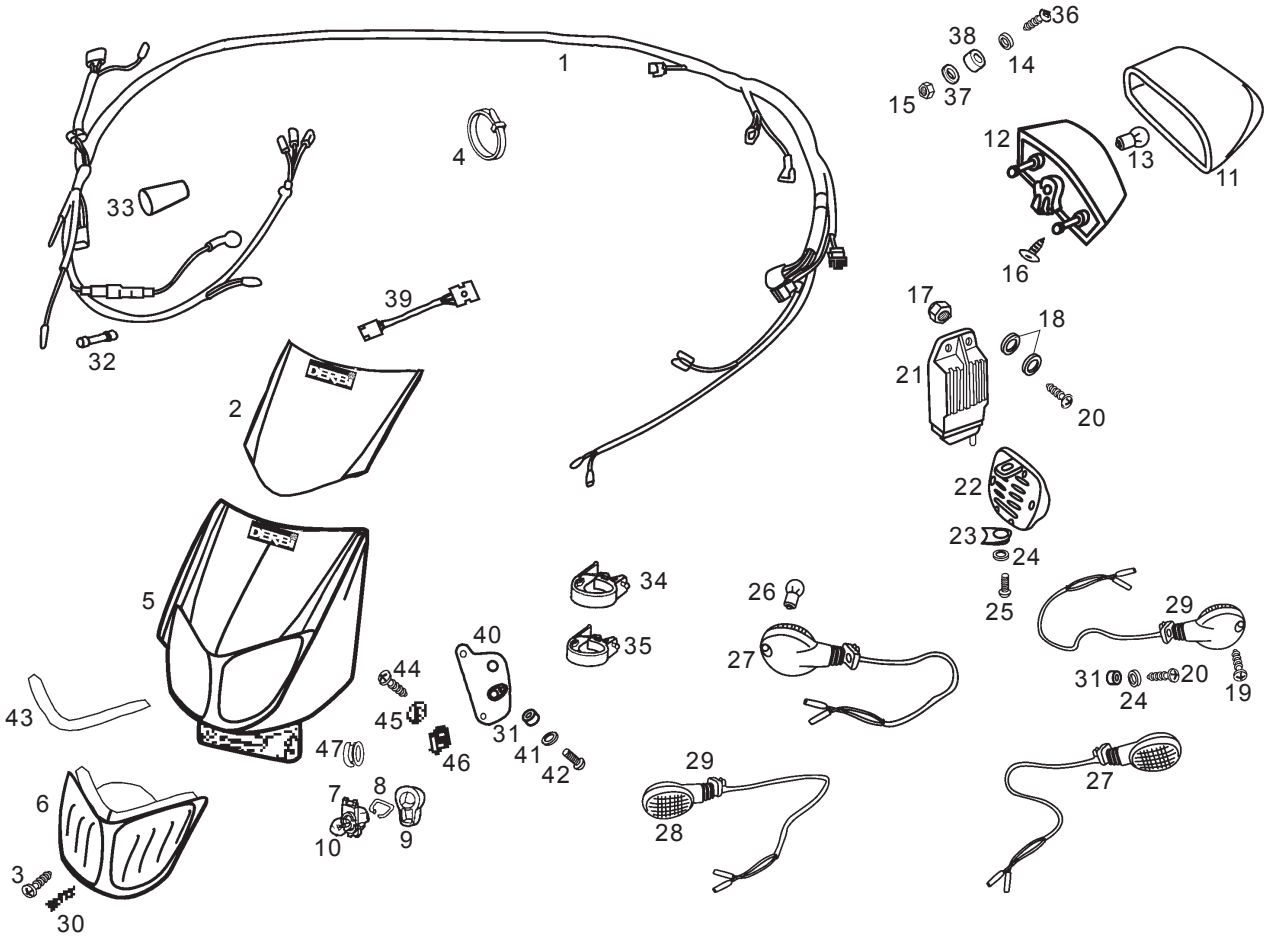

Fig.	Ver.	COD. KOD.	DESCRIPCIÓN DENOMINAZIONE NAME	BEZEICHNUNG DESIGNATION	MOD.	NOTAS NOTES NOTA MITSCHRIFT NOTES
05C		00H02229377	SCTO.CARC.FARO AZUL SUBCOMP.CARC.FARO C/C. HEADLIGHT CUSING SUB-ASSEMBLY	SCHEINWERFERVERKLEIDUNG PLAQUE PHARE	3 F	
05D		00H02229375	SCTO.CARC.FARO ROJO SUBCOMP.CARC.FARO C/C. HEADLIGHT CUSING SUB-ASSEMBLY	SCHEINWERFERVERKLEIDUNG PLAQUE PHARE	4 G	
05E		00H02229374	SCTO.CARC.FARO NEGRA SUBCOMP.CARC.FARO C/C. HEADLIGHT CUSING SUB-ASSEMBLY	SCHEINWERFERVERKLEIDUNG PLAQUE PHARE	5 9 H L	
05F		00H02229372	SCTO.CARC.FARO VERDE SUBCOMP.CARC.FARO C/C. HEADLIGHT CUSING SUB-ASSEMBLY	SCHEINWERFERVERKLEIDUNG PLAQUE PHARE	6 A I M	
05G		00H02229373	SCTO.CARC.FARO AZUL SUBCOMP.CARC.FARO C/C. HEADLIGHT CUSING SUB-ASSEMBLY	SCHEINWERFERVERKLEIDUNG PLAQUE PHARE	7 B J N	
05H		00H02229371	SCTO.CARC.FARO ROJO SUBCOMP.CARC.FARO C/C. HEADLIGHT CUSING SUB-ASSEMBLY	SCHEINWERFERVERKLEIDUNG PLAQUE PHARE	8 C K O	
06A		00H01013011	CTO.FARO DT. COMPLESSO FARO ANTERIORE HEADLIGHT LENS SUB-ASSEMBLY	SCHEINWERFER OPTIQUE COMPLETE	1 2 3 4 5 6 7 8 9 A B C D E F G H I J K L M N O	
07A		00003710110	R-PORTALAMPARAS PORTA-LAMPADE BULB HOLDER	LAMPENHALTER R-PORTE-LAMPES	1 2 3 4 5 6 7 8 9 A B C D E F G H I J K L M N O	
08A		00003710120	R-MUELLE PORTLAMPARAS R- MOLLA PORTALAMPADE BULB HOLDER SPRING	FEDER F. LAMPENHALTER R-RESSORT PORTE-LAMPES	1 2 3 4 5 6 7 8 9 A B C D E F G H I J K L M N O	
09A		00D05700141	R-PROTECT.PORTALAMP.FARO FDS-SV R-PROTEZIONE PORTA LAMPADA FA HEADLAMP BULB HOLDER PROTC	LAMPENDECKEL R-PROT.PORTE-LAMPES PHARE F	1 2 3 4 5 6 7 8 9 A B C D E F G H I J K L M N O	
10A		00H01000131	LAMPARA FARO.12V.35/35W. LAMPADA FARO 12V 35/35W HEADLIGHT BULB	SCHEINWERFERLAMPE 12V/35-3 TUBE PHARE 12V/35-35W	1 2 3 4 5 6 7 8 9 A B C D E F G H I J K L M N O	

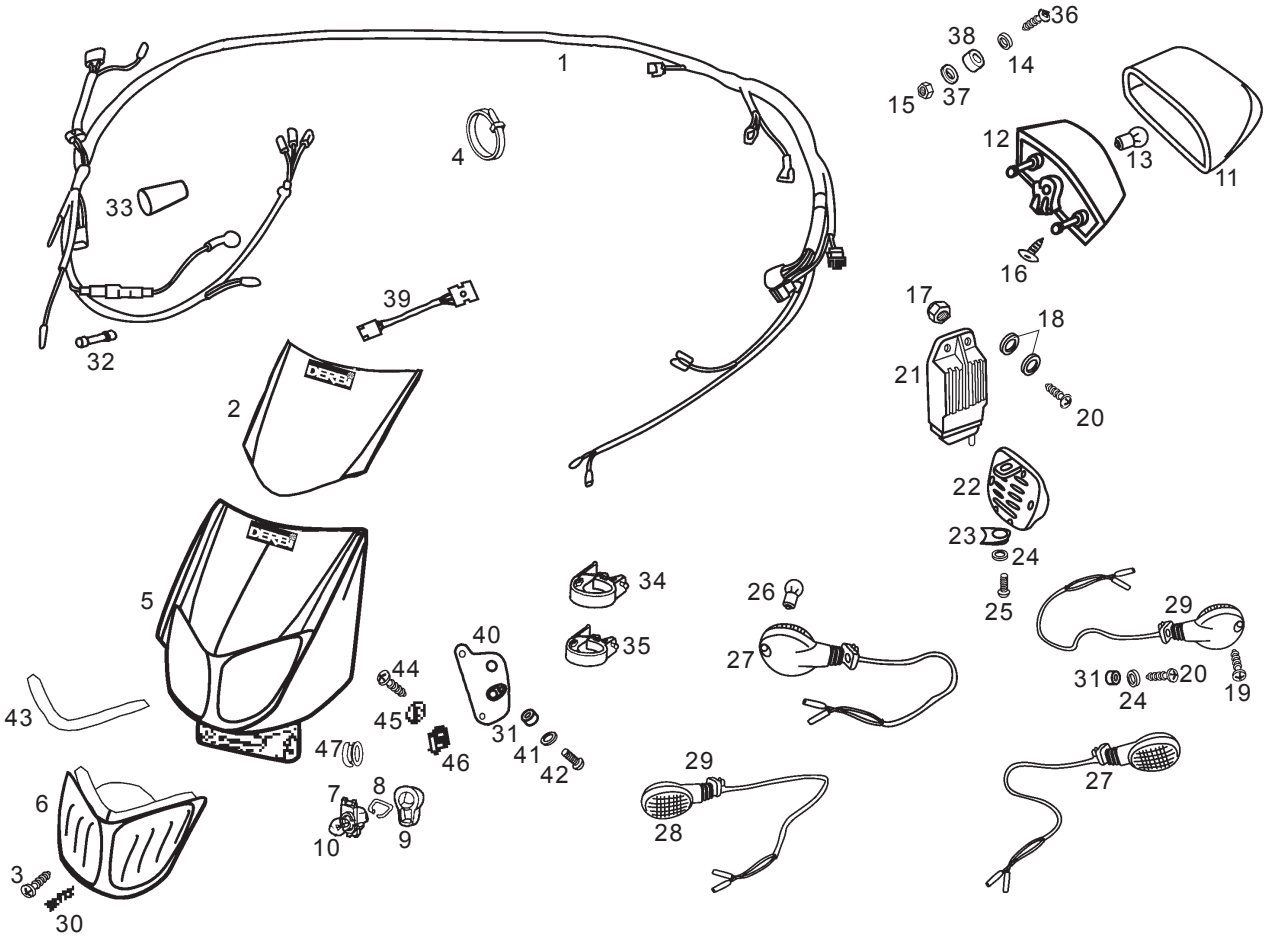

Fig.	Ver.	COD. KOD.	DESCRIPCIÓN DENOMINAZIONE NAME	BEZEICHNUNG DESIGNATION	MOD.	NOTAS NOTES NOTA MITSCHRIFT NOTES
11A		00H01002341	R-CRISTAL PILOTO VETRO SPIA/STOP LENS, TAILLIGHT	RUCK LIGHTCELLONES AVANNAH CABOCHON DE FEU ARRIERE	1 2 3 4 5 6 7 8 9 A B C D E F G H I J K L M N O	
12A		00H01006321	CTO.FARO PILOTO COMPLESSO FANALINO POSTERIORE TAIL LIGHT ASSY	RUCKLIGHT FEU ARRIERE	1 2 3 4 5 6 7 8 9 A B C D E F G H I J K L M N O	
13A		00H01000371	LAMP.PILOTO-STOP.12V.21/5W. LAMPADA FANALINO POSTERIORE BULB, TAILLIGHT/STOP	BIRNE BREMSLIGHT 12V 21/5 LAMPE-TEMOIN-STOP 12V 21/5W	1 2 3 4 5 6 7 8 9 A B C D E F G H I J K L M N O	
14A		00H03800722	ARAND.TOPE MUELLE EMBRAGUE RONDELLA WASHER	SCHEIBE RONDELLE	1 2 3 4 5 6 7 8 9 A B C D E F G H I J K L M N O	
15A		00000023051	TCA. AUTOBLOCANTE 5M80 DADO AUTOBLOCCANTE M5 SELF-LOCKING NUT M5	MUTTER SELBSTS 5M80 DIN-98 ECROU INDESSERRABLE 5M80 DI	1 2 3 4 5 6 7 8 9 A B C D E F G H I J K L M N O	
16A		00G01001571	R-TOR.FIJ.FARO PILOTO PREDATOR VITE FISSAGGIO FANALINO POST. SCREW OF TAILLIGHT LENS	LOCK SCREW OF TAILLIGHT LENS VIS DE FIX.DU CABOCHON	1 2 3 4 5 6 7 8 9 A B C D E F G H I J K L M N O	
17A		00000021060	TCA.EXAG. 6M100. DIN- DADO ESAGONALE 6M100. DIN HEXAGON NUT 6M100	MUTTER 6M100 ECROU HEXAGONAL 6M100.	1 2 3 4 5 6 7 8 9 A B C D E F G H I J K L M N O	
18A		00402060001	ARAND.PLANA MECANIZ.D.6.DIN125 RONDELLA PIATTA D6 MACHINED FLAT WASHER D6 DIN-12	SCHEIBE ROND. PLATE MECANISSE	1 2 3 4 5 6 7 8 9 A B C D E F G H I J K L M N O	
19A		00011021300	TOR.AUTR.C/CRUZ.2,9X13.DIN7981 VITE AUTOAVVIT C/CROCE 2,9X13 SCREW	INBUSSCHRAUBE MOTOR BEFEST VIS	1 2 3 4 5 6 7 8 9 A B C D E F G H I J K L M N O	
20A		00012161600	TOR.C/CRUZ.NG.6M100X16.D7985-Z VITE TESTA CROCE NERA PHILIPS SCREW	SCHRAUBE 6M100X16 D-7985 VIS T.CROIX NOIR 6M100X16 D	1 2 3 4 5 6 7 8 9 A B C D E F G H I J K L M N O	
21A		00H01004841	REGULADOR AC-DC +CENTRAL INT. REGOLATORE TENSIONE REGULATOR	SPANNUNGSREGLER REGULATEUR AC/DC	1 2 3 4 5 6 7 8 9 A B C D E F G H I J K L M N O	

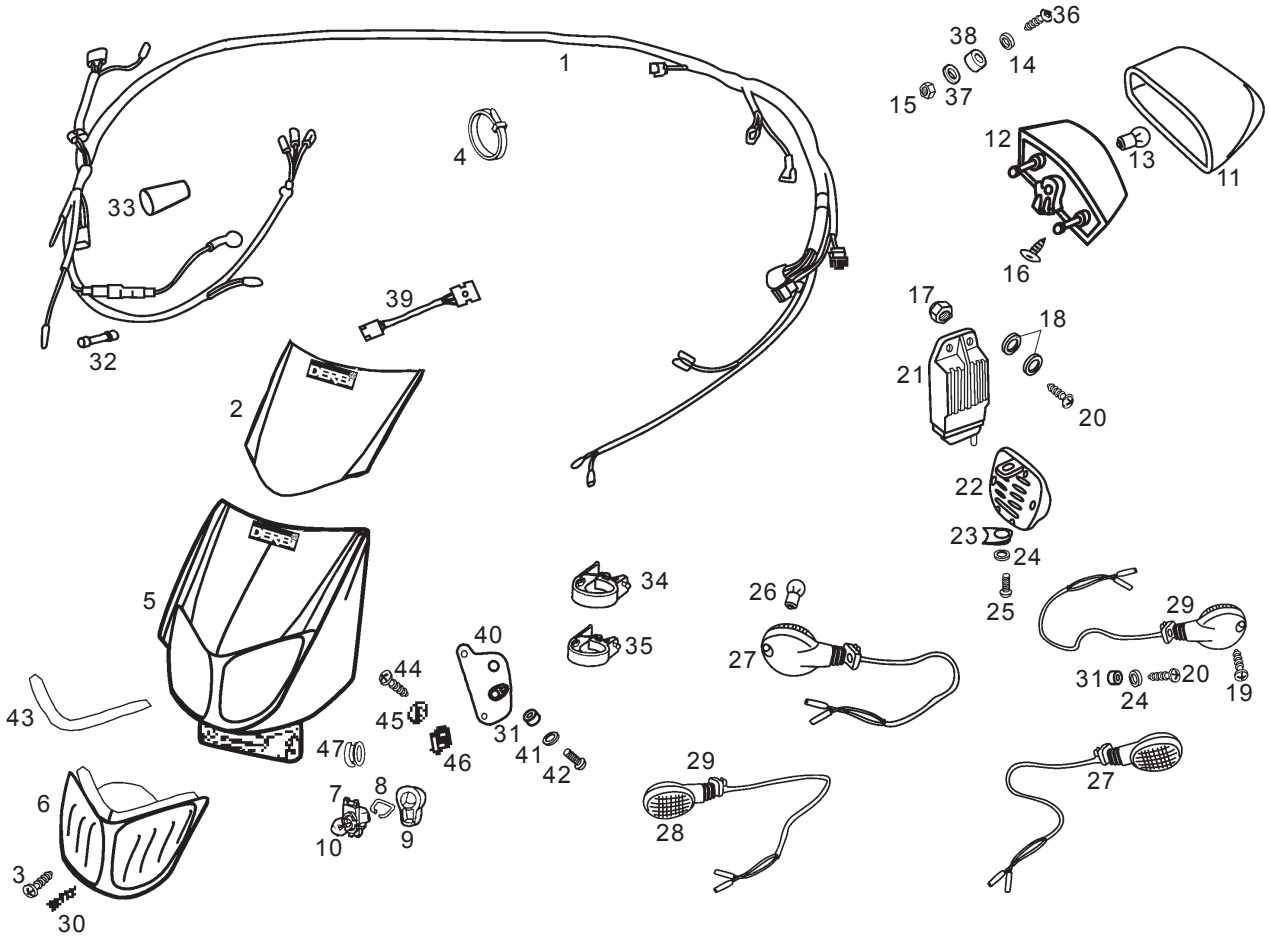

Fig.	Ver.	COD. KOD.	DESCRIPCIÓN DENOMINAZIONE NAME	BEZEICHNUNG DESIGNATION	MOD.	NOTAS NOTES NOTA MITSCHRIFT NOTES
22A		00F01001311	CTO.CLAXON.12V-DC/0450-A.SC/91 CLACSON 12V CC HORN ASSEMBLY	HUPE 12V-DC/ D450-A.SC/91 KLAXON COMPLET 12V.DC/0450-	1 2 3 4 5 6 7 8 9 A B C D E F G H I J K L M N O	
23A		00D01501371	TCA.FIJ.CUBRECAD.212827 DADO FISSAGGIO NUT	MUTTER ECROU	1 2 3 4 5 6 7 8 9 A B C D E F G H I J K L M N O	
24A		00D01200171	ARAND.EJE LEVA-FIJ.CUBRECAD. RONDELLA WASHER	SCHEIBE RONDELLE	1 2 3 4 5 6 7 8 9 A B C D E F G H I J K L M N O	
25A		00012061200	TOR.C/R.CR.6M100X12.NG.D-7985. VITE TONDO CROCE 6M100X12 NERA SCREW M6X12	SCHRAUBE.6M100X12.NG.D-798 VIS A TETE RONDE A FENTES C	1 2 3 4 5 6 7 8 9 A B C D E F G H I J K L M N O	
26A		0000A517011	LAMP.FARO INTERMITTES.12V.10W. LAMPADA 12V 10W INDICATOR LIGHT BULB 12V 10W	BLINKLICHTLAMPE 12V 10W. TUBE PHARES CLIGNOTANTS 12V	1 2 3 4 5 6 7 8 9 A B C D E F G H I J K L M N O	
27A		00H01701301	CTO.FARO INTTE.TR.DR.S-R COMPL.INDIC.DIREZIONE TURN SIGNAL LIGHT REAR RH	BLINKR HINTEN GLIGNOTEURS AR. DROITE	1 2 3 4 5 6 7 8 9 A B C D E F G H I J K L M N O	
28A		00H01704071	R-CRISTAL INTERMITENTE VETRO INTERMITTENTE LENS, TURN SIGNAL	BLINKERGLAS GLACE CLIGNOTANT ARRIEGE	1 2 3 4 5 6 7 8 9 A B C D E F G H I J K L M N O	
29A		00H01701391	CTO.FARO INTTE.TR.IZ.S-R\ COMP.INDIC.DIREZIONE TURN SIGNAL LIGHT REAR LEFT	BLINKR HINTEN GLIGNOTEURS AR. GAUCHE	1 2 3 4 5 6 7 8 9 A B C D E F G H I J K L M N O	
30A		00H02304501	MUELLE REGULACION FARO MOLLA FARO ANTERIORE FRONT HEAD LIGHT SPRING	SCHEINWERFER-FEDER RESSORT PHARE AVANT	1 2 3 4 5 6 7 8 9 A B C D E F G H I J K L M N O	
31A		00000023060	TCA.AUTOBLOC. 6M100.DIN-985.8 DADO AUTOBLOCCANTE 6M100 SELF-LOCKING NUT M6	MUTTER ECROU INDESSERRABLE 6M100.D	1 2 3 4 5 6 7 8 9 A B C D E F G H I J K L M N O	
32A		00G01000911	FUSIBLE 4AH FUSIBILE 4AO. FUSE 4AH.	FUSE, 4 A FUSIBLE 4 AH.	1 2 3 4 5 6 7 8 9 A B C D E F G H I J K L M N O	

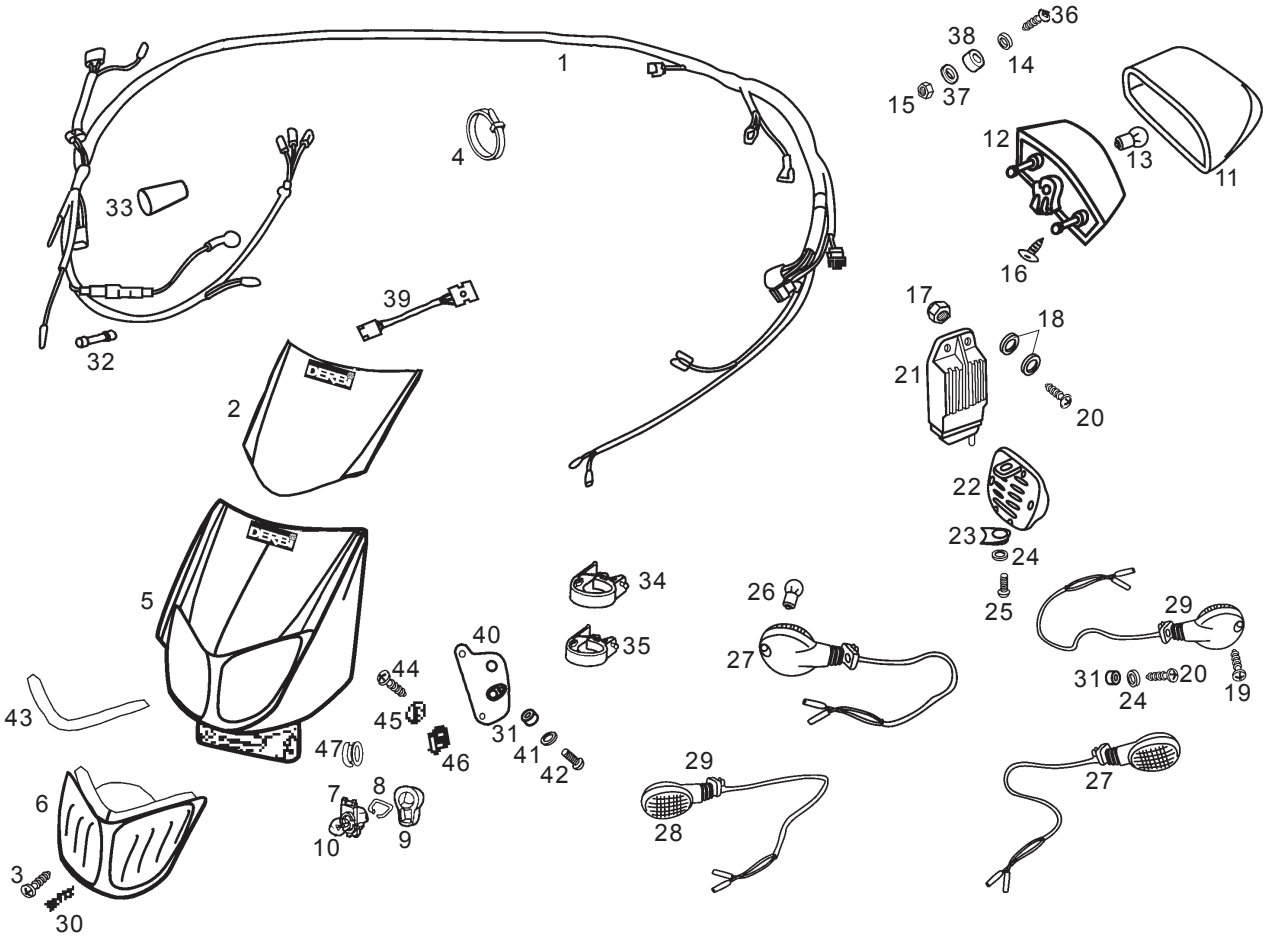

Fig.	Ver.	COD. KOD.	DESCRIPCIÓN DENOMINAZIONE NAME	BEZEICHNUNG DESIGNATION	MOD.	NOTAS NOTES NOTA MITSCHRIFT NOTES
33A		00H02300961	PROTECT. CONEX.INST.ELECT. PROTEZIONE WIRING HARNESS CONNECTOR	WIRING HARNESS CONNECTOR PROTECTION CONNEXIONS	1 2 3 4 5 6 7 8 9 A B C D E F G H I J K L M N O	
34A		00H04608841	BRIDA FIJ. SUP. CARC. FARO FLANGIA CLAMP	BEF.-SCHELLE ENTRETOISE	1 2 3 4 5 6 7 8 9 A B C D E F G H I J K L M N O	
35A		00H04607841	BRIDA FIJ. INF. CARC. FARO FLANGIA CLAMP	BEF.-SCHELLE ENTRETOISE	1 2 3 4 5 6 7 8 9 A B C D E F G H I J K L M N O	
36A		00004053500	TORN. C/ALLEN 5 X 35 VITE 5 X 35 BOLT, ALLEN 5X35	INBUSSCHRAUBE 5M80X50 VIS A TETE ALLEN 5M80X50	1 2 3 4 5 6 7 8 9 A B C D E F G H I J K L M N O	
37A		00H01002821	CASQ.FIJ.PILOTO TRAS. GHIERA BEARING	LAGER 6055 25.47.12 2RS COUSSINET 6005 25-47-12 2RS	1 2 3 4 5 6 7 8 9 A B C D E F G H I J K L M N O	
38A		00H06800461	SILENTB.FIJ.SOPTE.CARENADO SILENTBLOCK FISS.SUPORTO FAIRING MOUNTING BRACKET SECUR	SILENTBLOCK SILENTBLOC	1 2 3 4 5 6 7 8 9 A B C D E F G H I J K L M N O	
39A		00H05700481	CTO.TEMPORIZADOR CHECK IND. TEMPORIZZATORE CHECK INP. TIMER CHECK INDICATOR	ZEITSCHALTER FAISCEAU COMPTEUR	1 2 3 4 5 6 7 8 9 A B C D E F G H I J K L M N O	
40A		00H01502741	SOPORTE CARCASA SUPPORTO CARC. HEADLIGHT CUSING SUPPORT	HALTERUNG SUPPORT	1 2 3 4 5 6 7 8 9 A B C D E F G H I J K L M N O	
41A		00031106000	ARANDELA RONDELLA WASHER	SCHEIBE RONDELLE	1 2 3 4 5 6 7 8 9 A B C D E F G H I J K L M N O	
42A		00012063000	TORNILLO VITE SCREW	SCHRAUBE VIS	1 2 3 4 5 6 7 8 9 A B C D E F G H I J K L M N O	
43A		00H05700101	TOPE FARO DTRO. FERMO FARO HEADLIGHT STOP	ANSCHLAG SCHEINWERFER BUTEE PHARE	1 2 3 4 5 6 7 8 9 A B C D E F G H I J K L M N O	

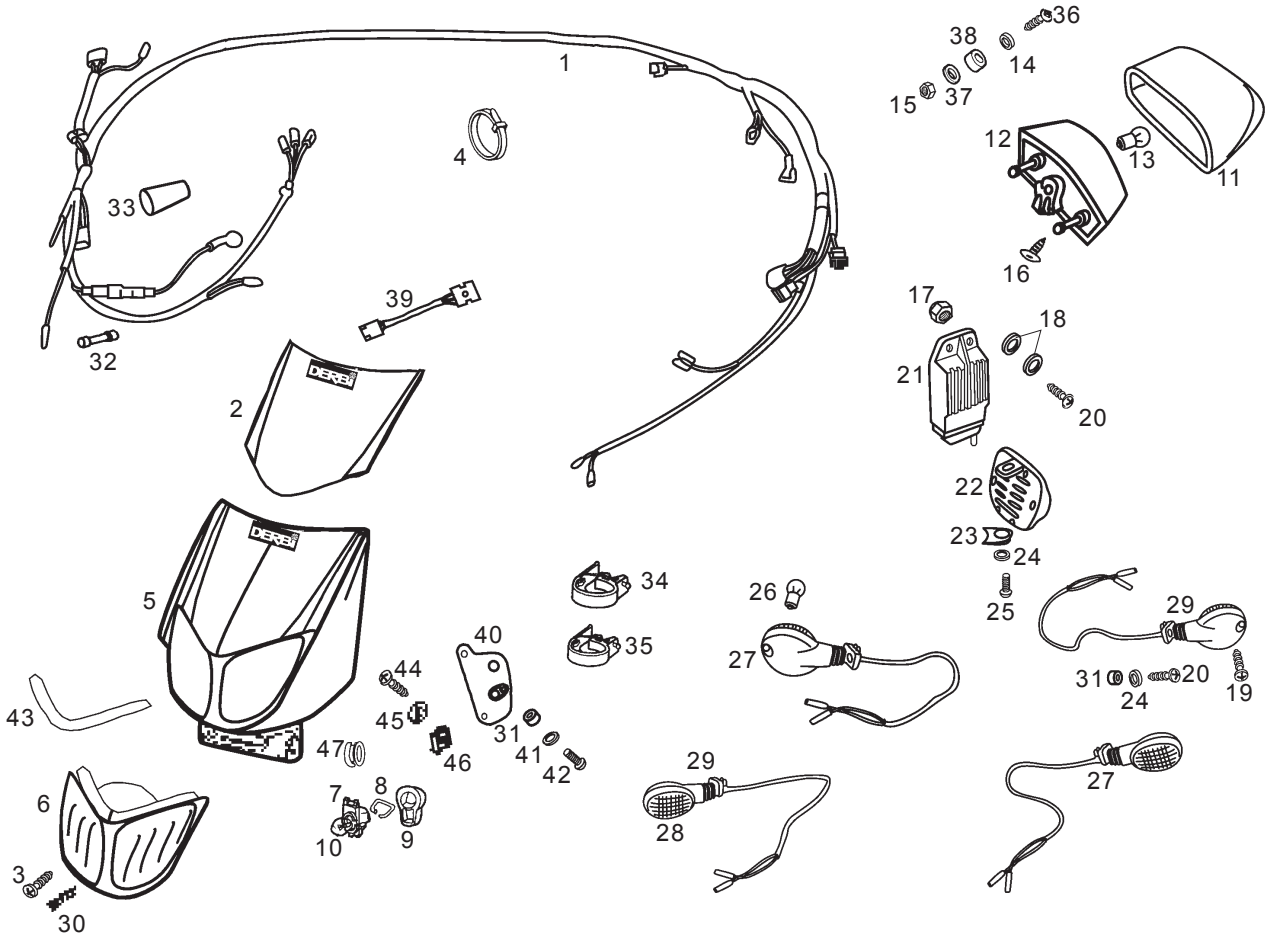

Fig.	Ver.	COD. KOD.	DESCRIPCIÓN DENOMINAZIONE NAME	BEZEICHNUNG DESIGNATION	MOD.	NOTAS NOTES NOTA MITSCHRIFT NOTES
44A		00000012515	TO. C/RED. CR.5M80X15 VITE TONDA CROCE GCR 5M80X15 ROUND HEAD PHILIPS SCREW 5M80X15	SCHRAUBE VIS T. RONDE CROIX	1 2 3 4 5 6 7 8 9 A B C D E F G H I J K L M N O	
45A		00D02600631	ARAND.TOPE MUELLE EMBRAGUE RONDELLA WASHER	SCHEIBE RONDELLE	1 2 3 4 5 6 7 8 9 A B C D E F G H I J K L M N O	
46A		00G04401461	TCA.FIJ.CUBRECAD.212827 DADO FISSAGGIO NUT	MUTTER ECROU	1 2 3 4 5 6 7 8 9 A B C D E F G H I J K L M N O	
47A		00H05701061	PASACABLE CARCASA FARO PASSACAVI CARC.FARO HEADLIGHT COSING RUBEER	KABELSCHUTZ PASSE-CABLES	1 2 3 4 5 6 7 8 9 A B C D E F G H I J K L M N O	

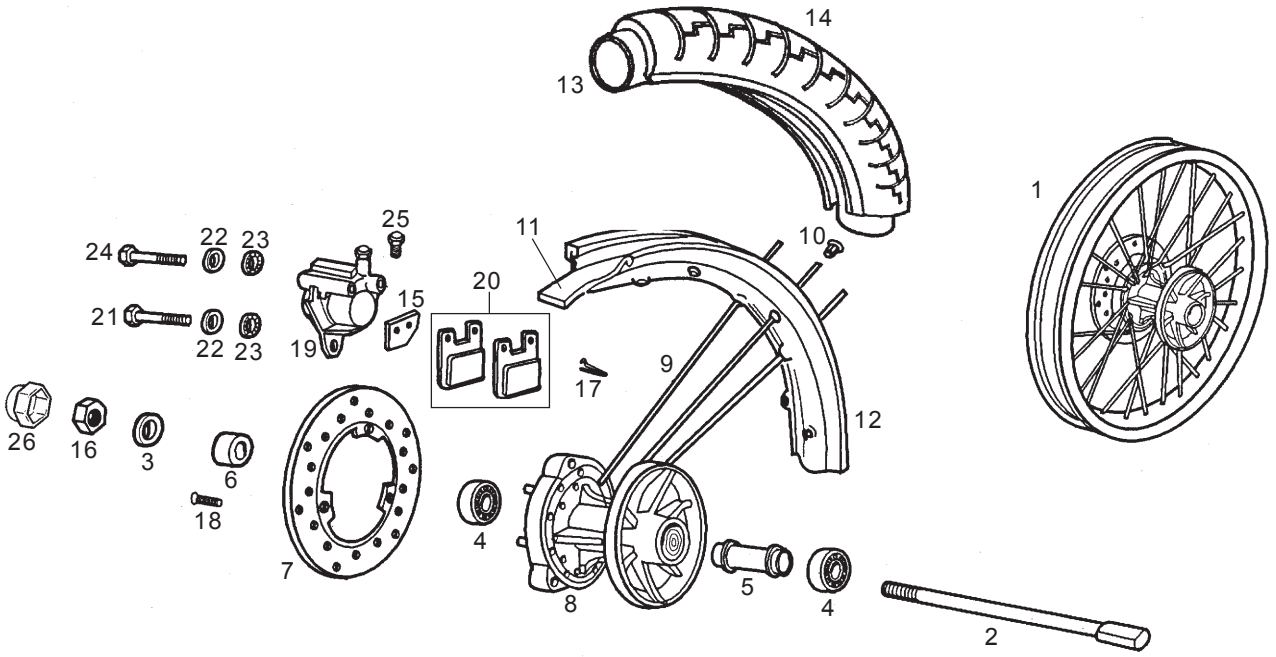

Fig.	Ver.	COD. KOD.	DESCRIPCIÓN DENOMINAZIONE NAME	BEZEICHNUNG DESIGNATION	MOD.	NOTAS NOTES NOTA MITSCHRIFT NOTES
01A		00H04714081	R-CTO. RDA. DT. C/DISCO SM'00 R-COMPL.RUOTA ANT.C/DISEGNO FRONT WHEEL ASSEMBLY	VORDERRAED ROUE AV.COMPLETE	1 2 3 4 5 6 7 8 9 A B C D E F G H I J K L M N O	
02A		00H01203272	EJE RUEDA DTRA.S-R ASSE RUOTA ANTERIORE AXLE FRONT WHEEL	VORDERRADADCHSE AXE DE ROUE AV.	1 2 3 4 5 6 7 8 9 A B C D E F G H I J K L M N O	
03A		00003112320	ARAND.EJE RUEDA.12'25X20X2. RONDELLA ASSE RUOTA.12'25X20X2 FRONT WHEEL AXLE WASHER	SHEIBE RADACHSE 12,25X20X2 RONDELLE AXE ROUE 12'25X20X	1 2 3 4 5 6 7 8 9 A B C D E F G H I J K L M N O	
04A		00058120100	COJINETE 6201.C3.2RS.12.32.10 CUSCINETTO A SFERE 12X32X10 BEARING 6201 12X32X10	LAGER6201.C3.2RS.12.32.10 PALIER 6201.C3.2RSR.12.32.1	1 2 3 4 5 6 7 8 9 A B C D E F G H I J K L M N O	
05A		00D01300091	SCTO. SEP. COJINETES SEPARATORE CUSCINETTI SPACER	DISTANZHULSE ENTRETOISE	1 2 3 4 5 6 7 8 9 A B C D E F G H I J K L M N O	
06A		00008213182	CASQ. LADO PLATO CHIERA LATO PIATTO SIDEFLAGE SLEEVE	DISTANZHULSE ENTRETOISE	1 2 3 4 5 6 7 8 9 A B C D E F G H I J K L M N O	
07A		00H01208021	DISCO FR.DT.SM DISCO FRENO ANTERIORE FRONT BRAKE DISC	SCHEIBE NBREMSE VORN DISQUE FREIN AVANT	1 2 3 4 5 6 7 8 9 A B C D E F G H I J K L M N O	
08A		00H01205711	CTO. CARRETE DTRO. MOZZO ANT. FRONT HUB ASSY	RADNABE MOYEU	1 2 3 4 5 6 7 8 9 A B C D E F G H I J K L M N O	
09A		00H01303691	RADIO RUEDA DT. RAGGIO RUOTA ANT. WHEEL ARM.	SPEICHE RAYON DE ROUE	1 2 3 4 5 6 7 8 9 A B C D E F G H I J K L M N O	
10A		00002212070	TCA.RADIO. DADO RADIO SPOKE NUT	MUTTER F.SPEICHE ECROU DE RAYON	1 2 3 4 5 6 7 8 9 A B C D E F G H I J K L M N O	
11A		00D01301401	"PROTECT.CAMARA RDA.DTRA. PROTETTORE CAMERA RUOTA RIM STRIP	FELGELBAND PROTECTEUR DE CHAMBRE A AIR	1 2 3 4 5 6 7 8 9 A B C D E F G H I J K L M N O	

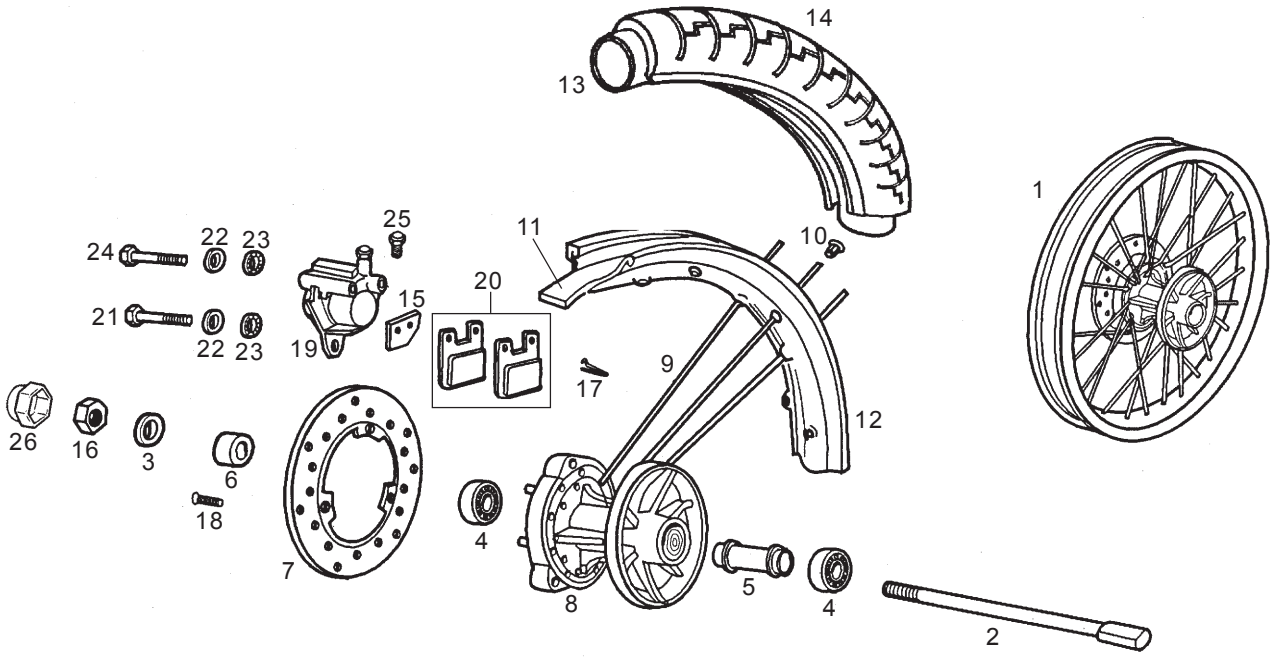

Fig.	Ver.	COD. KOD.	DESCRIPCIÓN DENOMINAZIONE NAME	BEZEICHNUNG DESIGNATION	MOD.	NOTAS NOTES NOTA MITSCHRIFT NOTES
12A		00H01211081	LLANTA RUEDA DTRA. CERCHIONE RUOTA ANT. FRONT WHEEL RIM	VORDERRADFELGE JANTE AV.	1 2 3 4 5 6 7 8 9 A B C D E F G H I J K L M N O	
13A		00H01207101	CAMARA RDA.DT.RUBBER CAMERA D'ARIA FRONT TUBE	SCHLAUCH VORNE CHAMBRE A AIR	1 2 3 4 5 6 7 8 9 A B C D E F G H I J K L M N O	
14A		00H01211111	CUBTA.DTRA. RUBBER COPERTORE ANT. FRONT CASING	REIFEN BORN PNEU AV.	1 2 3 4 5 6 7 8 9 A B C D E F G H I J K L M N O	
15A		00G04700131	R-PLACA INTERN. PASTILLA FRENO PIASTRA INTERM. PASTIGLIA INTERMED. PLATE, BRAKE PAD	SWISCHENPLATTE DES BREMSBE CALE DE PLAQU.DE FREIN ANTI	1 2 3 4 5 6 7 8 9 A B C D E F G H I J K L M N O	
16A		00232120032	TCA.EXAG.12M150.DIN-934/10. DADO ESAGONALE 12M150 HEX NUT, 12 MM X 1.50	MUTTER ECROU HEXAGONAL	1 2 3 4 5 6 7 8 9 A B C D E F G H I J K L M N O	
17A		00H01301831	MUELLE FIJ. PASTILLA FRENO TRAS. MOLLA FISSAGGIO PASTIGLIA FREN REAR BRAKE PAD SECUR SPRING	FEDER RESSORT FIXATION PLAQUETTE	1 2 3 4 5 6 7 8 9 A B C D E F G H I J K L M N O	
18A		00H02402282	TOR.FIJ.DISCO FRENO VITE FISSAGGIO DISCO FRENO REAR BRAKE DISC.SECURING SCREW	BEF.-SCHRAUBE BREMSSCHEIBE BOUL.SER.DISQUE FR.ARR.FEN.	1 2 3 4 5 6 7 8 9 A B C D E F G H I J K L M N O	
19A		00H01202192	CTO. PINZA FRENO DTRO.ORO COMPLESSO GANASCIA FRENO ANTER LEFT-HAND FRONT CLIP ASSY	BREMSZANGE ENS.ETRIER DE FREIN	1 2 3 4 5 6 7 8 9 A B C D E F G H I J K L M N O	
20A		00G04700141	R-JUEGO PASTILLAS FRENO PASTIGLIE FRENO POSTERIORE FRONT BRAKE PAD	BREMSBELAG VORNE PLAQUETTE DE FREIN	1 2 3 4 5 6 7 8 9 A B C D E F G H I J K L M N O	
21A		00022083521	TOR.C/EXAG. 8M125X35.DIN- VITE TESTA ESAGONALE 8M125X35 HEX HEAD SCREW 8M125X35	INBUSSCHRAUBE VIS T. CREUSE	1 2 3 4 5 6 7 8 9 A B C D E F G H I J K L M N O	
22A		00402080001	ARAND.PLANA MECANIZ.D.8.DIN125 RONDELLA PIATTA D8 MACHINED FLAT WASHER D8 DIN-12	SCHEIBE ROND. PLATE MECANISEE	1 2 3 4 5 6 7 8 9 A B C D E F G H I J K L M N O	

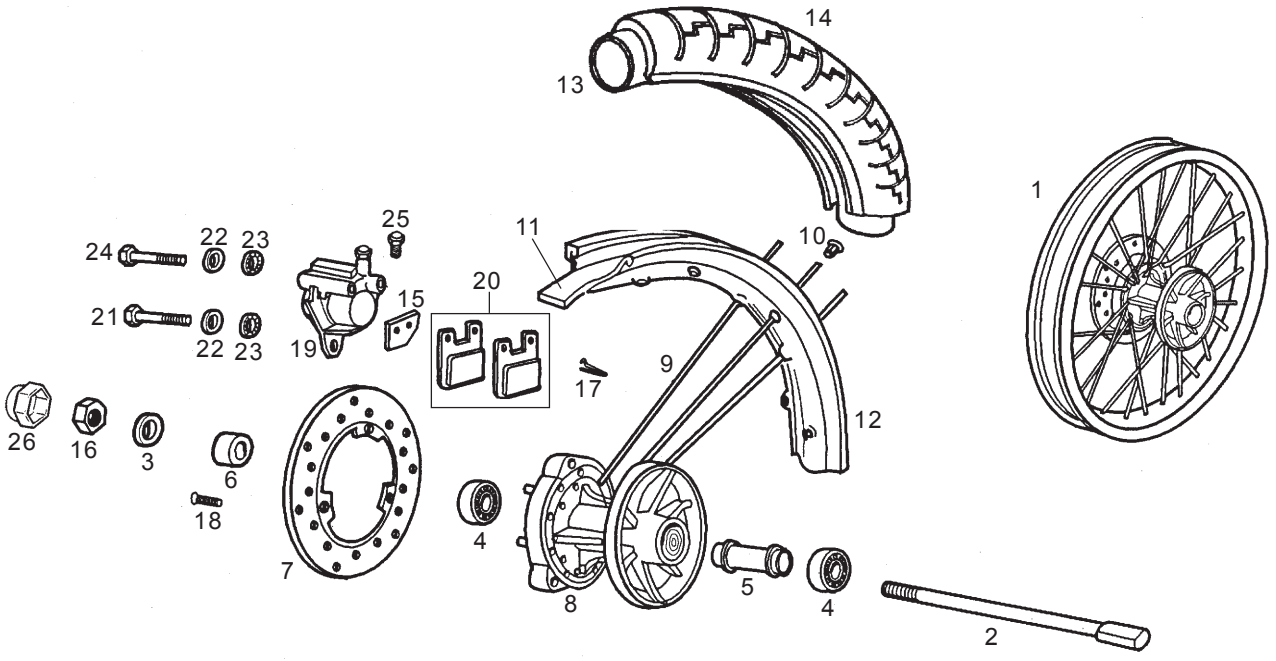

Fig.	Ver.	COD. KOD.	DESCRIPCIÓN DENOMINAZIONE NAME	BEZEICHNUNG DESIGNATION	MOD.	NOTAS NOTES NOTA MITSCHRIFT NOTES
23A		00034000802	ARAND.ESTRELL.INT.D8.DIN6798-J RONDELLA STELLA INTERNA D8 INNER STAR WASHER D.8	ASCHEIBE D.8 DIN 6798-J RONDELLE EVENTAIL INT.D8DIN	1 2 3 4 5 6 7 8 9 A B C D E F G H I J K L M N O	
24A		00022086521	TORN. EXAG. 8 X 65 VITE ESAGONALE 8X65 HEX. HEAD SCREW 8X65	INBUSSCHRAUBE VIS T. CREUSE HEX.	1 2 3 4 5 6 7 8 9 A B C D E F G H I J K L M N O	
25A		00F04700121	R-CTO. PURGADOR R-COMPLESSO SPURGO FRONT BRAKE BLEED CLIP ASSY	ABLASSHAHN R-ENS.PURGEUR PINCE FREIN A	1 2 3 4 5 6 7 8 9 A B C D E F G H I J K L M N O	
26A		00H01202331	PROTECTOR TUERCA PROTEZIONE PROTECTOR	ABDECKUNG PROTECTEUR	1 2 3 4 5 6 7 8 9 A B C D E F G H I J K L M N O	

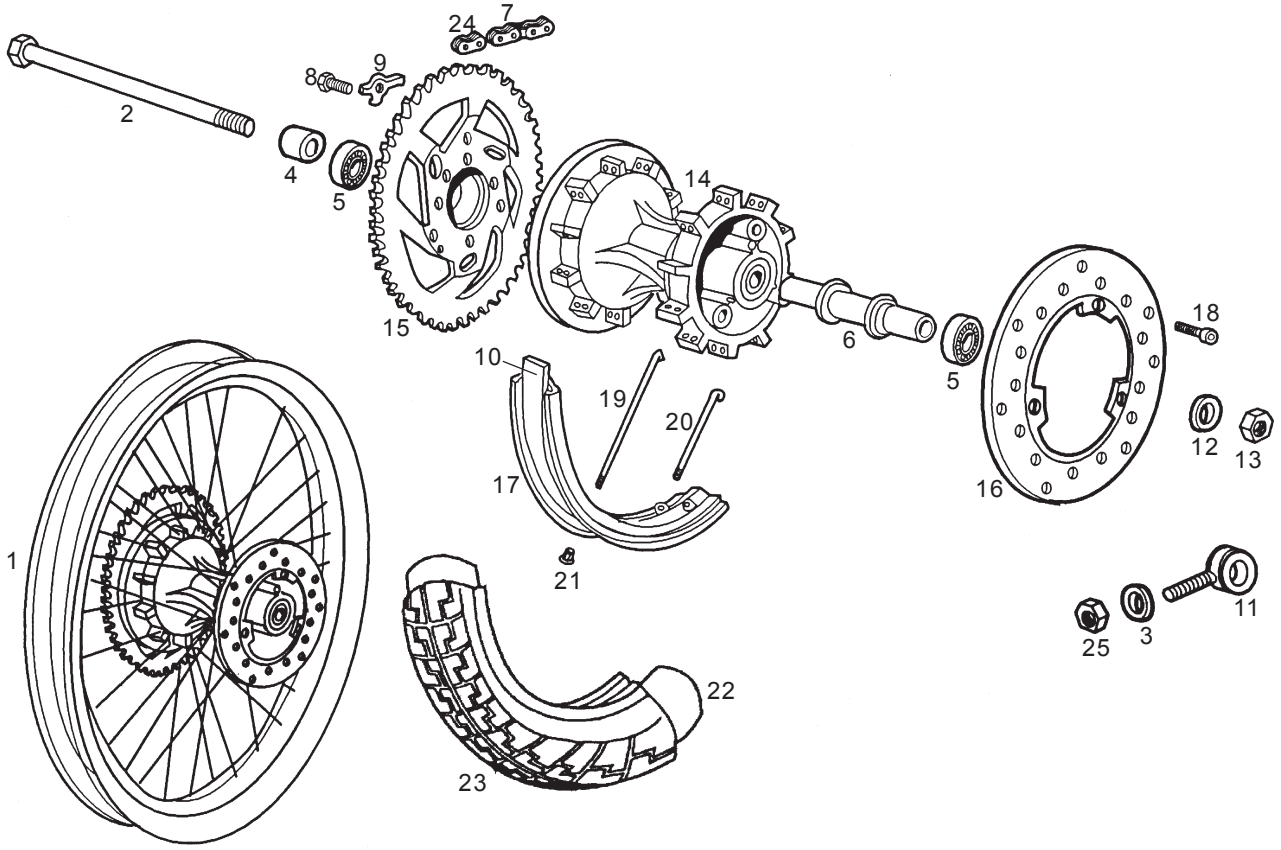

Fig.	Ver.	COD. KOD.	DESCRIPCIÓN DENOMINAZIONE NAME	BEZEICHNUNG DESIGNATION	MOD.	NOTAS NOTES NOTA MITSCHRIFT NOTES
01A		00H02426271	R-CTO. RUEDA TRAS. COMP.RUOTA POST. REAR WHEEL ASSEMBLY	HINTERRAD ROUE ARRIERE COMPLETE	1 2 3 4 5 6 7 8 9 A B C	
01B		00H02425271	R-CTO. RUEDA TRAS. COMP.RUOTA POST. REAR WHEEL ASSEMBLY	HINTERRAD ROUE ARRIERE COMPLETE	D E F G H I J K L M N O	
02A		00H01304202	CTO. EJE RDA. TRAS. SUBCOMPLESSO ASSE RUOTA POSTER REAR WHEEL AXLE SUB-ASSEMBLY G	HINTERRADACHSE AXE ROUE ARRIE	1 2 3 4 5 6 7 8 9 A B C D E F G H I J K L M N O	
03A		00402060001	ARAND.PLANA MECANIZ.D.6.DIN125 RONDELLA PIATTA D6 MACHINED FLAT WASHER D6 DIN-12	SCHEIBE D.6 ROND. PLATE MECANISEE D6DIN	1 2 3 4 5 6 7 8 9 A B C D E F G H I J K L M N O	
04A		00001113192	CASQ. GRUESO LADO PLATO GHIERA LATO PIATTO SPACER	DISTANZHULSE ENTRETOISE	1 2 3 4 5 6 7 8 9 A B C D E F G H I J K L M N O	
05A		00058120100	COJINETE 6201.C3.2RS.12.32.10 CUSCINETTO A SFERE 12X32X10 BEARING 6201 12X32X10	LAGER6201.C3.2RS.12.32.10 PALIER 6201.C3.2RSR.12.32.1	1 2 3 4 5 6 7 8 9 A B C D E F G H I J K L M N O	
06A		00H01304091	SCTO.SEP.COJTES.TRAS SEPARATORE COUSCIN. SPACER REAR HUB BEARING	DISTANZHULSE SEPARATEUR ROULEMENTS	1 2 3 4 5 6 7 8 9 A B C D E F G H I J K L M N O	
07A		00H01521201	CADENA 140 CATENA SEZ. 140P. TRANSMISSION CHAIN 140	KETTE 140 CHAINE TRANSMISSION 140	1 2 3 4 5 6 7 8 9 A B C	
07B		00H01502201	CADENA 130P CATENA SEZ. 130PP. TRANSMISSION CHAIN 130P	KETTE 130P CHAINE TRANSMISSION 130P	D E F G H I J K L M N O	
08A		00002182000	TOR.C/EXAG.8M125X20.8.8.DIN- VITE TESTA ESAGONALE .8M125X20 HEXAGONAL HEAD SCREW 8M125X20	HEXAGONAL HEAD SCREW 8M125X20 ECROU	1 2 3 4 5 6 7 8 9 A B C D E F G H I J K L M N O	
09A		00H01302052	PREC.TOR.PLATO ARRAST. PIASTRINA VITE PIATTO TRASCINA BRAKE DISC RETAINER	SCHRAUBE MITNEHMERSCHEIBE ARRETOIR DES BOULONS DISQUE	1 2 3 4 5 6 7 8 9 A B C D E F G H I J K L M N O	

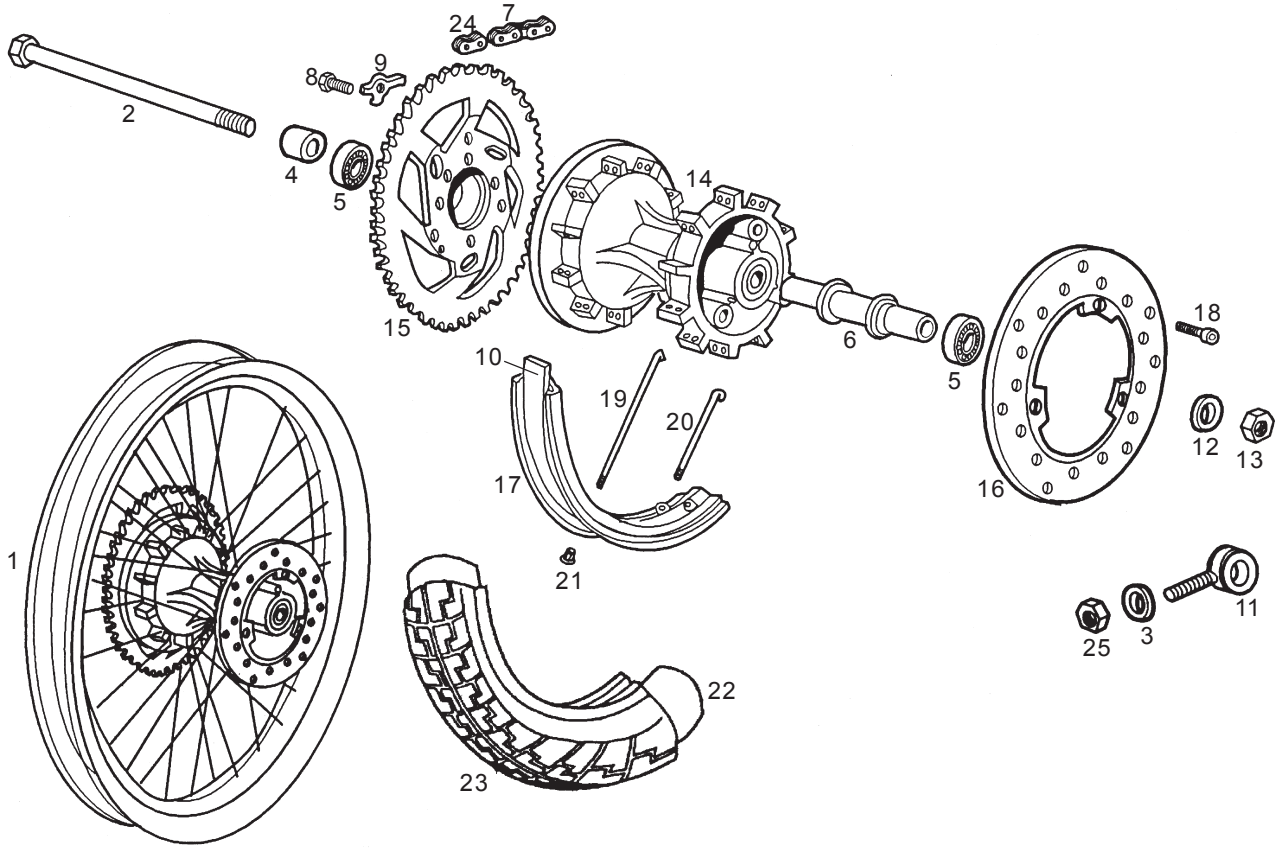

Fig.	Ver.	COD. KOD.	DESCRIPCIÓN DENOMINAZIONE NAME	BEZEICHNUNG DESIGNATION	MOD.	NOTAS NOTES NOTA MITSCHRIFT NOTES
10A		00D01303401	"PROTECT.CAMARA RDA.TRAS. PROTEZIONE CAMERA RUOTA RIM STRIP	FELGELBAND PROTECTEUR DE CHAMBRE A AIR	1 2 3 4 5 6 7 8 9 A B C D E F G H I J K L M N O	
11A		00H01302172	SCTO.TENSOR RUEDA SUBCOMPLESSO TENSORE RUOTA ADJUSTER, REAR WHEEL	HINTERRADSPANNER TENDEUR DE ROUE ENSEMBLE	1 2 3 4 5 6 7 8 9 A B C D E F G H I J K L M N O	
12A		00F01210312	ARAND.EJE RDA.DTRA.TOPE REENV. RONDELLA ASSE RUOTA ANTERIORE WASHER, AXLE	SCHEIBE RONDELLE	1 2 3 4 5 6 7 8 9 A B C D E F G H I J K L M N O	
13A		00262120032	TCA.AUTOBLOC. 12M150. DIN-985. DADO AUTOBLOCANTE 12M150 DIN SELF-LOCKING NUT 12M150	MUTTER ECROU IDESSERABLE 12M150	1 2 3 4 5 6 7 8 9 A B C D E F G H I J K L M N O	
14A		00H01307821	CTO.CARRETE TR.S-R MOZZO POST. REAR COIL	RADNABE MOYEU ARRIERE	1 2 3 4 5 6 7 8 9 A B C D E F G H I J K L M N O	
15A		00H01319032	PLATO ARRASTRE.Z-70 PIATTO TRAINO Z-70 DRIVE PLATE Z-70	MITNEHMERSCHEIBE Z-70 COURONNE ARRIERE Z-70	1 2 3 4 5 6 7 8 9 A B C	
15B		00H01317031	PLATO ARRASTRE.Z-53 PIATTO TRAINO Z-53 DRIVE PLATE Z-53	MITNEHMERSCHEIBE Z-53 COURONNE ARRIERE Z-53	D E F G H I J K L M N O	
16A		00H01305531	DISCO FRENO TR.SDR-R DISCO FRENO POSTERIORE REAR BRAKE DISC	BREMSSCHEIBE HINTEN DISQUE DE FREIN ARRIERE	1 2 3 4 5 6 7 8 9 A B C D E F G H I J K L M N O	
17A		00H01306351	LLANTA TRASERA CERCHIONE POSTERIORE MAGWHEEL REAR	HINTERRADFELGE JANTE ARRIERE NUE.	1 2 3 4 5 6 7 8 9 A B C D E F G H I J K L M N O	
18A		00H02403281	TOR.FIJ.DISCO FR.TR. VITE FISSAGGIO DISCO FRENO REAR BRAKE DISC SECURING SCREW	BEF.-SCHRAUBE BREMSSCHEIBE BOUL.SER.DISQUE FR.ARR.FEN.	1 2 3 4 5 6 7 8 9 A B C D E F G H I J K L M N O	
19A		00H01301731	RADIO TRAS. LADO PLATO RADIO POST.LATO PIATTO REAR INNER SPOKE	SPEICHE RAYON ROUE ARRIERE INT.	1 2 3 4 5 6 7 8 9 A B C D E F G H I J K L M N O	

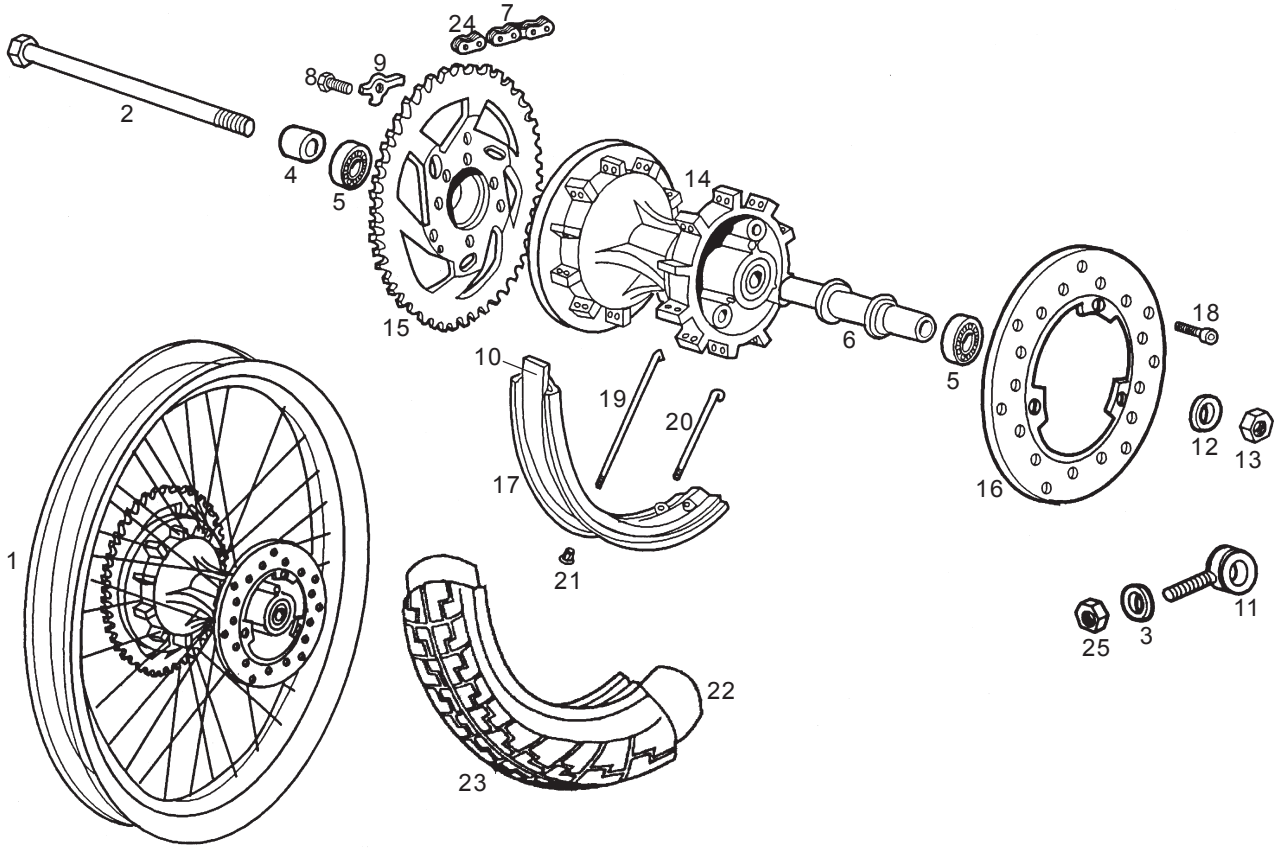

Fig.	Ver.	COD. KOD.	DESCRIPCIÓN DENOMINAZIONE NAME	BEZEICHNUNG DESIGNATION	MOD.	NOTAS NOTES NOTA MITSCHRIFT NOTES
20A		00H01303691	RADIO TRAS. LADO DISCO RADIO POST. DISCO REAR SHORT INNER SPOKE	SPEICHE RAYON ROUE AR INT.COURT	1 2 3 4 5 6 7 8 9 A B C D E F G H I J K L M N O	
21A		00002212070	TCA.RADIO. DADO RADIO SPOKE NUT	MUTTER F.SPEICHE ECROU DE RAYON	1 2 3 4 5 6 7 8 9 A B C D E F G H I J K L M N O	
22A		00H01309361	CAMARA RDA.TR.RUBBER CAMERA RUOTA POST. REAR WHEEL CAMBER	SCHLAUCH CHAMRE A AIR ARR.	1 2 3 4 5 6 7 8 9 A B C D E F G H I J K L M N O	
23A		00H01311321	CUBTA.TR.RUBBER COPERTONE POST. REAR CASING	REIFEB HINTEN PNEU ARR.	1 2 3 4 5 6 7 8 9 A B C D E F G H I J K L M N O	
24A		00H01501212	R-ENGANCHE DORAD.CADENA SEC. AGGANCIAMENTO CATENA SICUREZZA MASTER LINK	KETTENSHLOSS ATTACHE RAPIDE	1 2 3 4 5 6 7 8 9 A B C D E F G H I J K L M N O	
25A		00000023060	TCA.AUTOBLOC. 6M100.DIN-985.8 DADO AUTOBLOCCANTE 6M100 SELF-LOCKING NUT M6	MUTTER ECROU INDESSERRABLE 6M100.D	1 2 3 4 5 6 7 8 9 A B C D E F G H I J K L M N O	

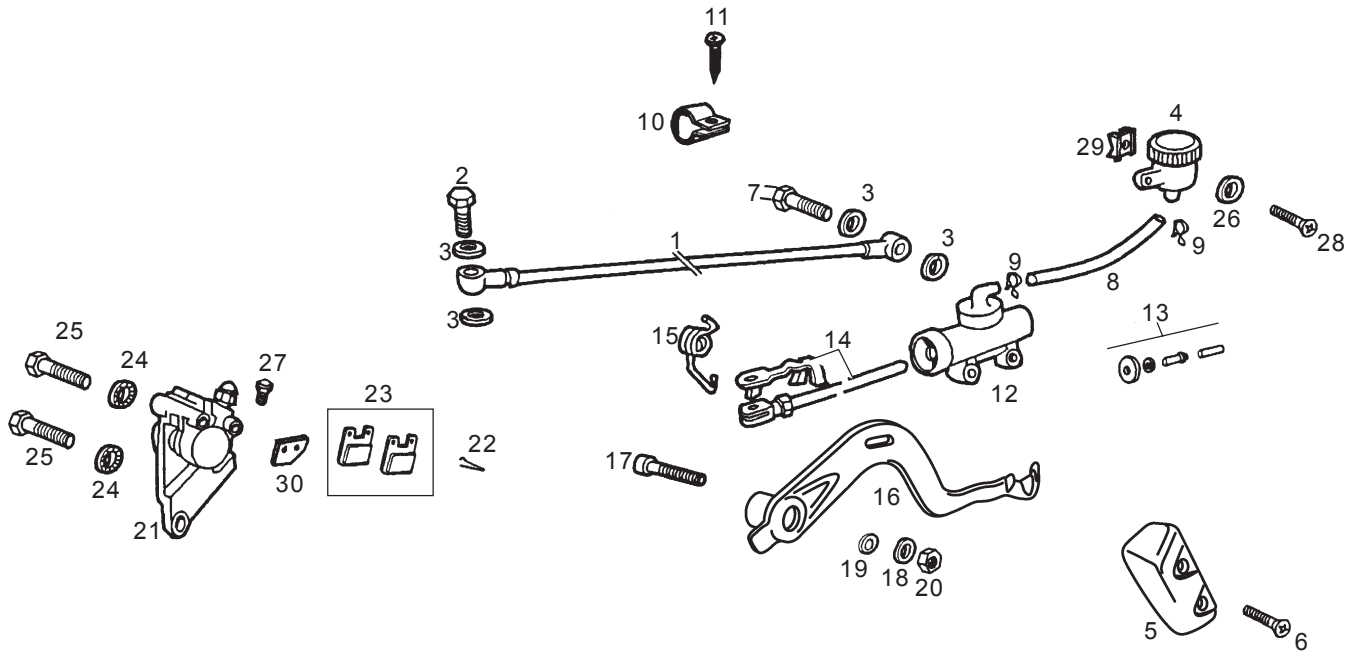

Fig.	Ver.	COD. KOD.	DESCRIPCIÓN DENOMINAZIONE NAME	BEZEICHNUNG DESIGNATION	MOD.	NOTAS NOTES NOTA MITSCHRIFT NOTES
01A		00H01109081	TUBO LIQ. FR. TRAS. TUBO LIQUIDO FRENO BRAKE ROD	BREMSSCHLAUCH TIGE DE FREIN	1 2 3 4 5 6 7 8 9 A B C D E F G H I J K L M N O	
02A		00006309260	RACORD TUBO HIDRAULICO RACCORDO TUBO IDRAULICO HYDRAULIC TUBE CONNECTOR	STUTZEN HIDRAULIKLEITUNG RACCORD TUYAU HYDRAULIQUE	1 2 3 4 5 6 7 8 9 A B C D E F G H I J K L M N O	
03A		00006321040	ARAND. JUNTA RACORD RONDELLA GUARNIZIONE RACCORDO CONNECTOR GASKET WASHER	DICHTRING RONDELLE DE JOINT RACCORD	1 2 3 4 5 6 7 8 9 A B C D E F G H I J K L M N O	
04A		00D01100201	CTO. DPSTO. LIQ. FRENO TRAS. COMPLESSO SERBATOIO LIQUIDO FR FLUID TUBE TANK	BEHALTER RESERVOIR FLUID TUBE	1 2 3 4 5 6 7 8 9 A B C D E F G H I J K L M N O	
05A		00H01101731	PROTECT.BOMBA.LIQ.FR.TR. PROTEZIONE FRENO POSTERIORE REAR BRAKE, PROTECTOR	ABDECKUNG PROTECTEUR ENS.COMMANDE FRE	1 2 3 4 5 6 7 8 9 A B C D E F G H I J K L M N O	
06A		00G01503701	TOR.FIJ.ESC.FRONTAL HUNTER 5.6 VITE FISSAGGIO SCUDO FRONTALE FRONT SHIELD SECURING SCREW	FRONT SHIELD SECURING SCREW BOULON SER. FRONTAL HUNTER	1 2 3 4 5 6 7 8 9 A B C D E F G H I J K L M N O	
07A		00H01001701	CTO. INTERRUPTOR STOP COMP.INTERUTTORE FANALINO SWITCH, STOP LIGHT	STOPCHALTER VO. INTERRUPTEUR COMMANDE STOP	1 2 3 4 5 6 7 8 9 A B C D E F G H I J K L M N O	
08A		00H01101211	TUBO DPSTO. A BOMBA FRENO TRAS. TUBO SERBATOIO A POMPA FRENO P REAR FLUID TUBE	SCHLAUCH FLEXIBLE DE FREIN ARRIERE	1 2 3 4 5 6 7 8 9 A B C D E F G H I J K L M N O	
09A		00H03700131	ABRAZ. ELAST. 8'8-9'3 RONDELLA STELLA INTERIORE ELASTIC CLAMP	SCHELLE ELAST. COLLIER ELASTIQUE	1 2 3 4 5 6 7 8 9 A B C D E F G H I J K L M N O	
10A		00H01501811	BRIDA FIJ.CABLE FR.TR. FLANGIA CLAMP	BEF.-SCHELLE ENTRETOISE	1 2 3 4 5 6 7 8 9 A B C D E F G H I J K L M N O	
11A		00011141300	TOR.AUT.C/CR.NG.4,8X13.D-7981B VITE AUTOFILETTANTE TESTA CROC SCREW, SELF TAPPING 4.8MM13	SCHRAUBE BOULON	1 2 3 4 5 6 7 8 9 A B C D E F G H I J K L M N O	

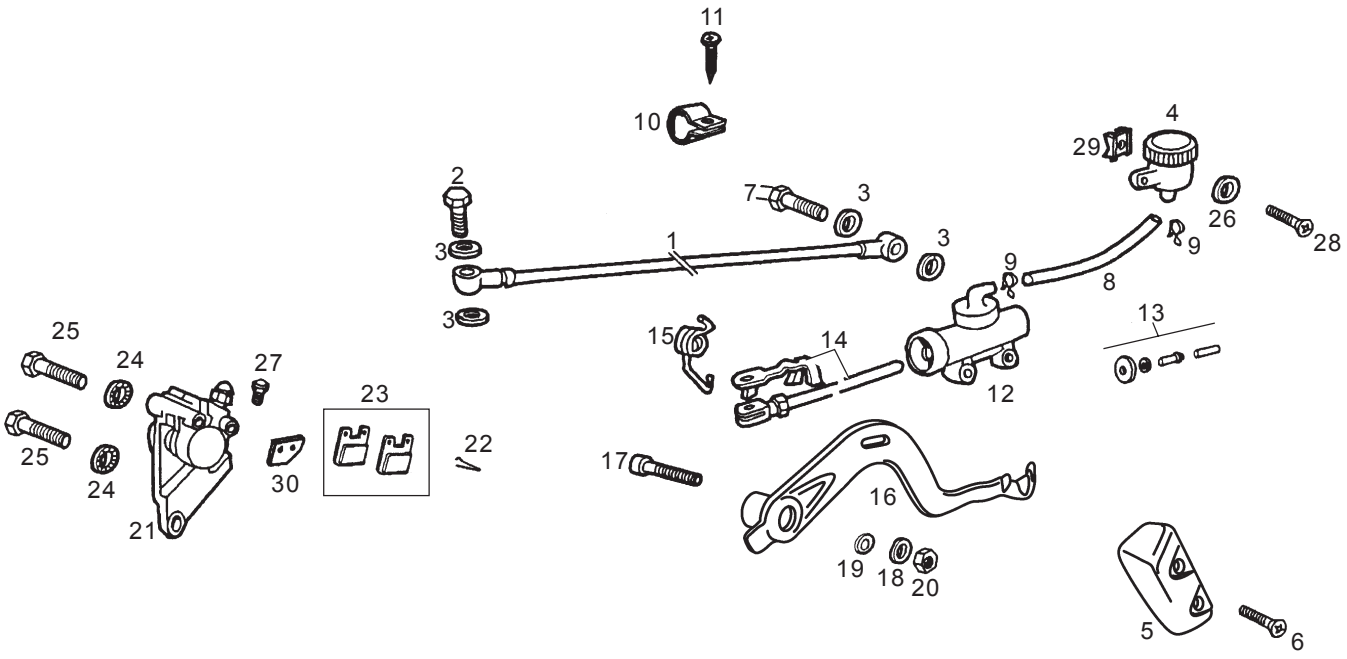

Fig.	Ver.	COD. KOD.	DESCRIPCIÓN DENOMINAZIONE NAME	BEZEICHNUNG DESIGNATION	MOD.	NOTAS NOTES NOTA MITSCHRIFT NOTES
12A		00H01102181	CTO. BOMBA FRENO TRASERO COMPLESSO FRENO POSTERIORE REAR BRAKE CONTROL ASSY	REAR BRAKE CONTROL ASSY. ENSEMBLE COMMANDE FREIN AR.	1 2 3 4 5 6 7 8 9 A B C D E F G H I J K L M N O	
13A		00H01100461	R-CTO. KIT BOMBA FR. TRAS. R-COMP.KIT POMPA FR.POSTER. REAR KIT CYLINDER ASSY	REP.-SATZBREMSZYL.HINTEN D ENSEM.KIT POPMPE FREIN ARR.	1 2 3 4 5 6 7 8 9 A B C D E F G H I J K L M N O	
14A		00H01103611	CTO.VARILLA BOMBA FR.TR. COMP.ASTA POMPA FRENO REAR BRAKE ROD	BREMSSTANGE TIGE DE FREIN ARRIERE	1 2 3 4 5 6 7 8 9 A B C D E F G H I J K L M N O	
15A		00H01102072	MUELLE PEDAL FR. TRAS. MOLLA PEDALE FRENO POSTERIORE SPRING PEDAL BRAKE	FEDER RESSORT PEDALE FREIN	1 2 3 4 5 6 7 8 9 A B C D E F G H I J K L M N O	
16A		00H01120021	PALANCA FRENO PEDALE FRENO BRAKE PEDAL	FUSSBREMSHEBEL PEDALE DE FREIN AR.	1 2 3 4 5 6 7 8 9 A B C D E F G H I J K L M N O	
17A		00H01100172	TORN. FIJ. PALANCA FR. TRAS. VITE PEDALE FRENO BRAKE PEDAL BRAKE	INBUSSCHRAUBE FUSSBREMSHEBEL BOULON PEDALE DE FREIN	1 2 3 4 5 6 7 8 9 A B C D E F G H I J K L M N O	
18A		00402080001	ARAND.PLANA MECANIZ.D.8.DIN125 RONDELLA PIATTA D8 MACHINED FLAT WASHER D8 DIN-12	SCHEIBE ROND. PLATE MECANISEE	1 2 3 4 5 6 7 8 9 A B C D E F G H I J K L M N O	
19A		00005527540	ARAND.REG.TOR.PAL.FIJ.MARCH RONDELLA SNODO PEDALE FRENO BUSHING	FUHRUNGSBUCHSE GABELSCHENK ENTRETOISE	1 2 3 4 5 6 7 8 9 A B C D E F G H I J K L M N O	
20A		00023108000	TCA.AUTOBLOC. 8M125.DIN-985.8 DADO AUTOBLOCCANTE 8M125 SELF-LOCKING NUT M8	MUTTER SELBSTS ECROU INDESSERABLE 8M125.DI	1 2 3 4 5 6 7 8 9 A B C D E F G H I J K L M N O	
21A		00H01102582	CTO.PINZA FR.TR.ORO SM'00 COMPLESSO GANASCI A POSTERIORE REAR CLIP ASSEMBLY	BREMSZANGE HINTEN ETRIER FREIN ARR.	1 2 3 4 5 6 7 8 9 A B C D E F G H I J K L M N O	
22A		00H01301831	MUELLE FIJ. PASTILLA FR. TRAS. MOLLA FISSAGGIO PASTIGLIA FREN REAR BRAKE PAD SECUR SPR.	FEDER RESSORT FIXATION PLAQUETTE	1 2 3 4 5 6 7 8 9 A B C D E F G H I J K L M N O	

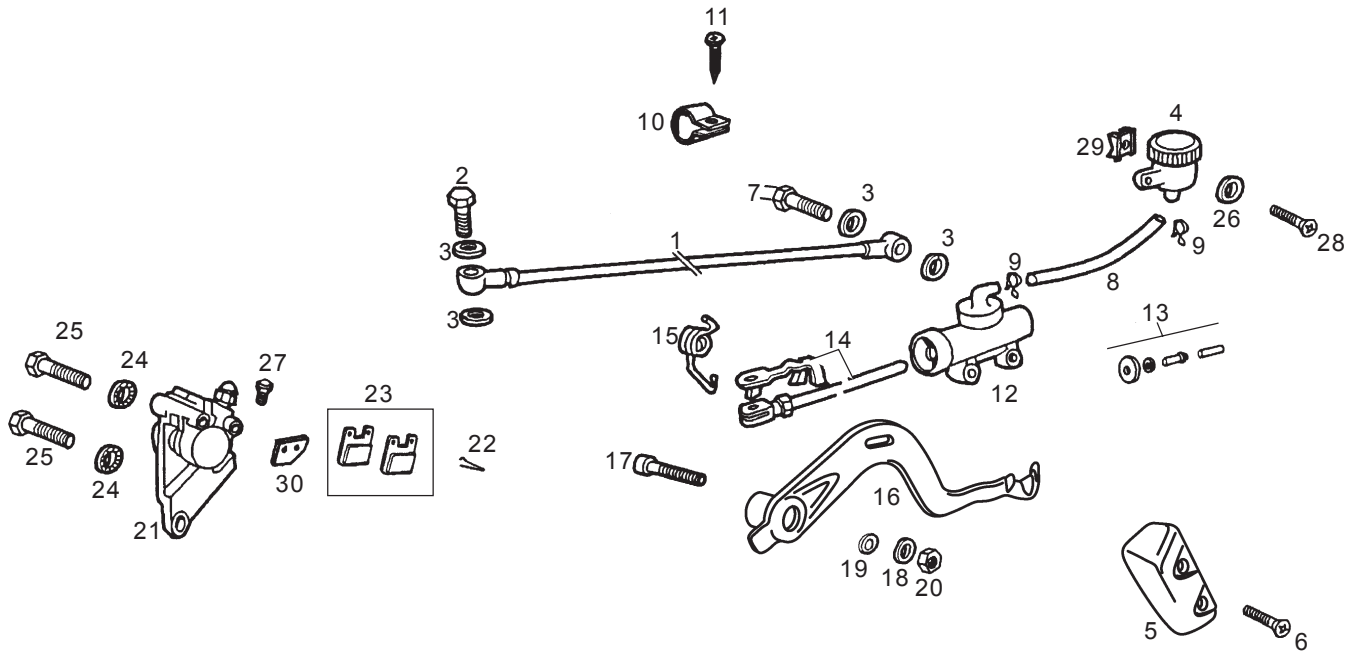

Fig.	Ver.	COD. KOD.	DESCRIPCIÓN DENOMINAZIONE NAME	BEZEICHNUNG DESIGNATION	MOD.	NOTAS NOTES NOTA MITSCHRIFT NOTES
23A		00G04700141	R-JUEGO PAST. FR. DT/TR. PASTIGLIE FRENO POSTERIORE FDS FRONT BRAKE PAD	BREMSBELAG VORNE PLAQUETTE DE FREIN	1 2 3 4 5 6 7 8 9 A B C D E F G H I J K L M N O	
24A		00034000802	ARAND.ESTRELL.INT.D8.DIN6798-J RONDELLA STELLA INTERNA D8 INNER STAR WASHER D.8	ASCHEIBE D.8 DIN 6798-J RONDELLE EVENTAIL INT.D8DIN	1 2 3 4 5 6 7 8 9 A B C D E F G H I J K L M N O	
25A		00000002840	TOR.C/EXAG. 8M125X40.8.8/D-931 VITE TESTA ESAGONALE 8M125X40 HEX.HEAD SCREW 8M125X40 D931	SCHRAUBE BOULON TETE HEX.8M125X40 D9	1 2 3 4 5 6 7 8 9 A B C D E F G H I J K L M N O	
26A		00D02600631	ARAND.TOPE MUELLE EMBRAGUE RONDELLA PIATTA D6 WASHER	SCHEIBE RONDELLE	1 2 3 4 5 6 7 8 9 A B C D E F G H I J K L M N O	
27A		00F04700121	R-CTO. PURGADOR SPURGO PINZA FRENO POST. FRONT BRAKE BLEED CLIP ASSY	ABLASSHAHN R-ENS.PURGEUR PINCE FREIN A	1 2 3 4 5 6 7 8 9 A B C D E F G H I J K L M N O	
28A		00012151500	TOR.C/RED.ALL.5M100X16.D7380 VITE T/TON.BRUGO.6M100X16.D738 ALLEN ROUND HEAD SCREW 6M100X1	SCHRAUBE 5M8OX16.D7985NG VIS A TETE RONDE A FENTES C	1 2 3 4 5 6 7 8 9 A B C D E F G H I J K L M N O	
29A		00G04401462	TCA.FIJ.CUBRECAD.212827 DADO FISSAGGIO NUT	MUTTER ECROU	1 2 3 4 5 6 7 8 9 A B C D E F G H I J K L M N O	
30A		00G04700131	R-PLACA INTERM. PASTILLA FRENO PIASTRA INTERMEDIA PASTIGLIA INTERMEDIATE PLATE, BRAKE PAD	SWISCHENPLATTE DES BREMSBE CALE DE PLAQU.DE FREIN ANTI	1 2 3 4 5 6 7 8 9 A B C D E F G H I J K L M N O	

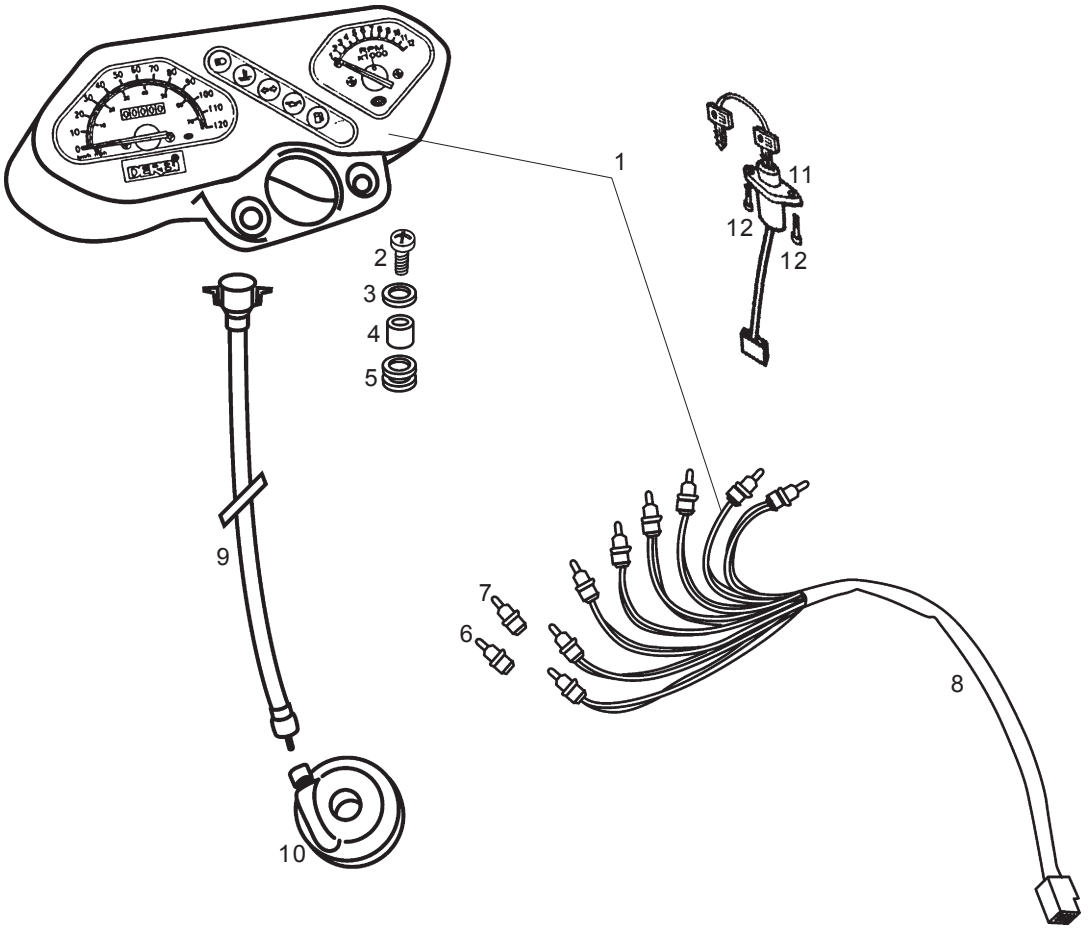

Fig.	Ver.	COD. KOD.	DESCRIPCIÓN DENOMINAZIONE NAME	BEZEICHNUNG DESIGNATION	MOD.	NOTAS NOTES NOTA MITSCHRIFT NOTES
01A	01	00H01612521	CTO.TABL.PORTAIST.SD-SM (KM/H) CRUSCOTTO DASH ASSY	INSTRUMENTERHALTER BOITIER TABLEAU BORD	H J	00H00027F381 00H00027F341
01A	02	00H01610521	CTO.TABL.PORTAIST.SD-SM (KM/H) CRUSCOTTO DASH ASSY	INSTRUMENTERHALTER BOITIER TABLEAU BORD	1 2 3 4 5 6 7 8 9 A B C D E F G H I J K L M N O	3H212325
01B		00H01620521	CTO.TABL.PORTAIST.SD (MILE/H) CRUSCOTTO DASH ASSY	INSTRUMENTERHALTER BOITIER TABLEAU BORD	9 A B C H I J K	ENGLAND
02A		00012152000	TOR.C/RED.CRUZ 5M80X20 D7985NE VITE TONDQ.CROCE 5M80X20.D7985 SCREW, 5M80X520 DIN7985	SCHRAUBE VIS CRUCIFORME5M80X20DIN798	1 2 3 4 5 6 7 8 9 A B C D E F G H I J K L M N O	
03A		00454050001	ARAND.D9021 15/5, 3X1,5 RONDELLA WASHER	SCHEIBE RONDELLE	1 2 3 4 5 6 7 8 9 A B C D E F G H I J K L M N O	
04A		00H01600911	CASQ. SILENTBLOC FIJ. TABLIER GHIERA SILENT.FISS.CRUSCOT.FE BUSHING	FUHRUNGSBUCHSE GABELSCHENK ENTRETOISE	1 2 3 4 5 6 7 8 9 A B C D E F G H I J K L M N O	
05A		00D01500021	PASACABL. INST.GUARD.TR.FDS/89 PORTACAVI IST. FARAFANGO POST. GROMMET	GUMMI CAOUTCHOUC PASSE-CABLE	1 2 3 4 5 6 7 8 9 A B C D E F G H I J K L M N O	
06A		00G01602581	R-CTO. PORTALAMP/LAMP. 12V 1,2 W PORTALAMPADE BULB HOLDER AND 12V 1,2W BULB	LAMPENHALTER R-PORTE-LAMPES	1 2 3 4 5 6 7 8 9 A B C D E F G H I J K L M N O	
07A		00G01601581	R-CTO. PORTALAMP/LAMP. 12V 2 W PORTALAMPADE BULB HOLDER AND 12V 2W BULB	LAMPENHALTER R-PORTE-LAMPES	1 2 3 4 5 6 7 8 9 A B C D E F G H I J K L M N O	
08A		00H04316651	CTO. INSTAL. TABLIER COMP.INSTALL.CRUSCOT. DASH INSTALATION ASSY	KABELBAUM FAISCEAU COMPTEUR	1 2 3 4 5 6 7 8 9 A B C D E F G H I J K L M N O	
09A		00H01617021	CTO.CABLE-FUN CTA.KM. COMPLESSO CAVO-GUAINA CONTACHI CABLE, SPEEDOMETER DRIVE	TACHOWELLE ENSEMB.CABLE-GAINE COMPTEUR	1 2 3 4 5 6 7 8 9 A B C D E F G H I J K L M N O	

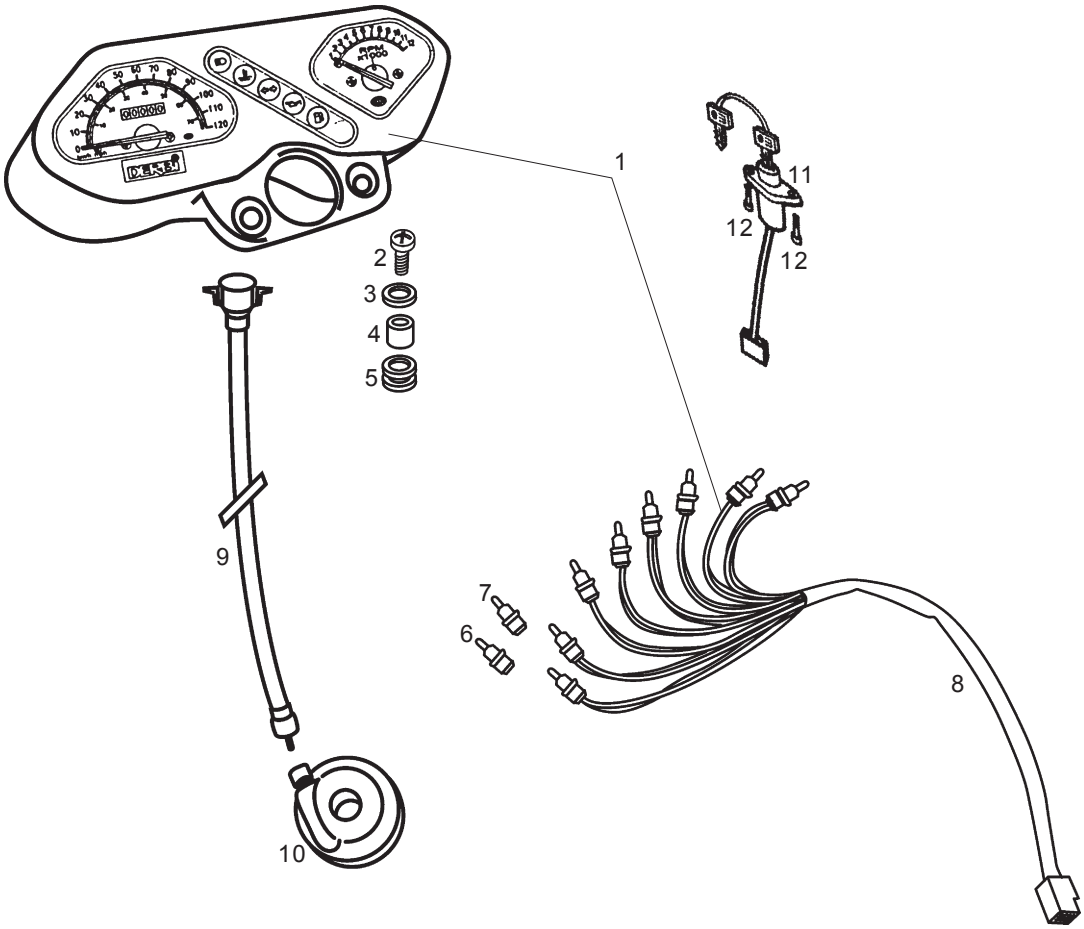

Fig.	Ver.	COD. KOD.	DESCRIPCIÓN DENOMINAZIONE NAME	BEZEICHNUNG DESIGNATION	MOD.	NOTAS NOTES NOTA MITSCHRIFT NOTES
10A		00G01607051	CTO.REENVIO. COMPLESSO RINVIO RETURN UNIT.	RETURN UNIT. RENVOI DE ROUE	1 2 3 4 5 6 7 8 9 A B C D E F G H I J K L M N O	
11A		00H01610381	CTO. CERRADURA CONTACTO COMPLESSO SERRATURE SCHLOSS	ZUNDSCHLOB SERRURE	1 2 3 4 5 6 7 8 9 A B C D E F G H I J K L M N O	
12A		00002082021	TOR. C/ALLEN 8 X 20 VITE TESTA ALLEN 8 X 20 ALLEN HEAD SCREW 8 X 20	INBUSSCHRAUBE VIS T. CREUSE	1 2 3 4 5 6 7 8 9 A B C D E F G H I J K L M N O	

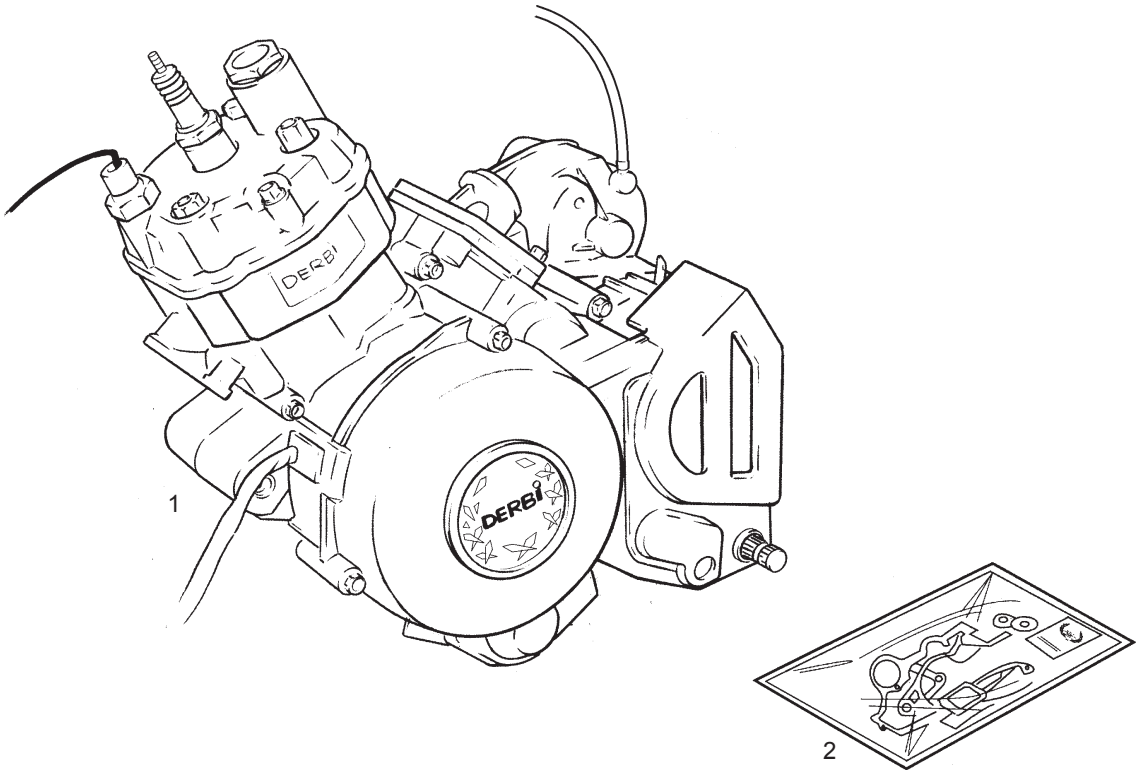

Fig.	Ver.	COD. KOD.	DESCRIPCIÓN DENOMINAZIONE NAME	BEZEICHNUNG DESIGNATION	MOD.	NOTAS NOTES NOTA MITSCHRIFT NOTES
01A		00H99927U003	MOTOR MOTORE ENGINE	MOTOR MOTEUR	1 2 3 4 5 6 7 8 9 A B C	
01B		00H99927E301	MOTOR MOTORE ENGINE	MOTOR MOTEUR	D E F G H I J K L M N O	
ACCESORIOS OPCIONALES / ACCESORI OPCIONALE / OPTIONAL ACCESORIES / WERKZEUG / OTILS FOURNIS						
02A		00H05205481	R-JUEGO JUNTAS R-GUARNIZIONI GASKET ASSY	DICHTSATZ POCHETTE DE JOINTS	1 2 3 4 5 6 7 8 9 A B C D E F G H I J K L M N O	

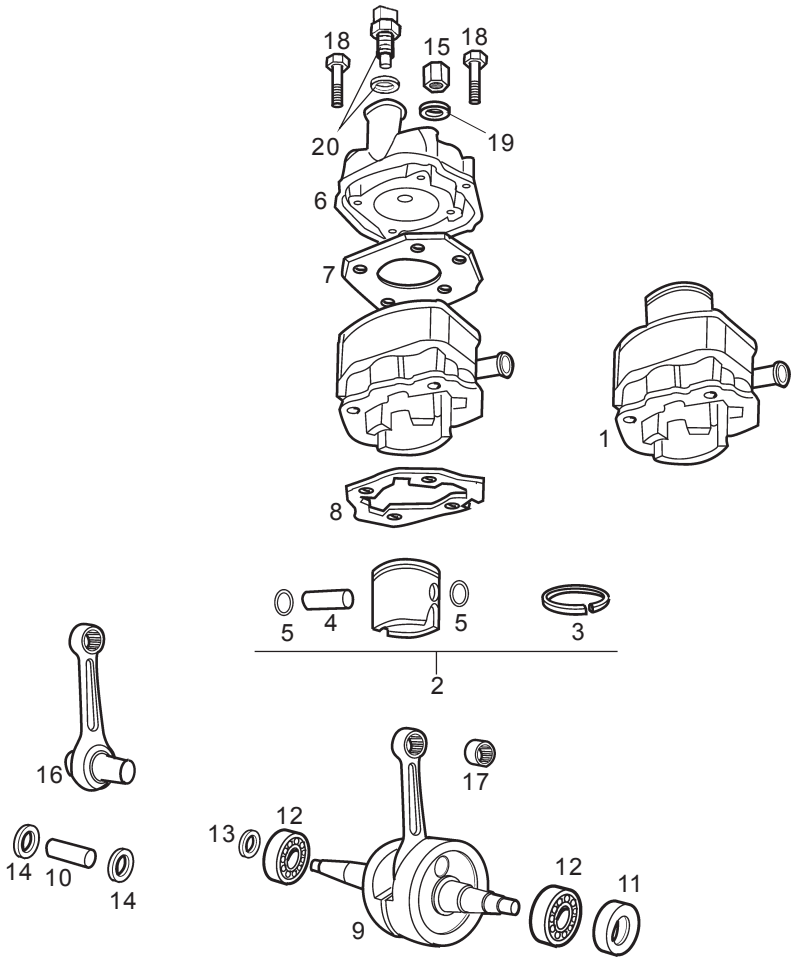

Fig.	Ver.	COD. KOD.	DESCRIPCIÓN DENOMINAZIONE NAME	BEZEICHNUNG DESIGNATION	MOD.	NOTAS NOTES NOTA MITSCHRIFT NOTES
01A		00H05007123	R-CTO.CILIN.-PISTON COMP.CILINDRO PISTONE CYLINDER PISTON ASSEMBLY	ZYLINDER UND KOLBEN CYLINDRE ET PISTON COMPLET	1 2 3 4 5 6 7 8 9 A B C D E F G H I J K L M N O	
02A		00H02542091	CTO.PISTON (A) COMPLESSO PISTONE (A) PISTON (A)	KOLBEN KOMPL.(A) PISTON-COMPLET (A)	1 2 3 4 5 6 7 8 9 A B C D E F G H I J K L M N O	
02B		00H02552091	CTO.PISTON. (B) COMPLESSO PISTONE (B) PISTON (B)	KOLBEN KOMPL. (B) PISTON-COMPLET (B)	1 2 3 4 5 6 7 8 9 A B C D E F G H I J K L M N O	
02C		00H02562091	CTO.PISTON. (C) COMPLESSO PISTONE (C) PISTON (C)	KOLBEN KOMPL. (C) PISTON-COMPLET (C)	1 2 3 4 5 6 7 8 9 A B C D E F G H I J K L M N O	
02D		00H02572091	CTO.PISTON. (D) COMPLESSO PISTONE (D) PISTON (D)	KOLBEN KOMPL. (D) PISTON-COMPLET (D)	1 2 3 4 5 6 7 8 9 A B C D E F G H I J K L M N O	
03A		00H02502111	R-ARO PISTON.SENDA (ASSO) R-SEGMENTO PISTONE PISTON RING	KOLBENDICHTRING SEGMENT DE PISTON	1 2 3 4 5 6 7 8 9 A B C D E F G H I J K L M N O	
04A		00H02502121	R-BULON PISTON 6V.(ASSO) SPINOTTO PISTONE PISTON PIN	KOLBENBOLZEN AXE PISTON	1 2 3 4 5 6 7 8 9 A B C D E F G H I J K L M N O	
05A		00H02501131	R-ANILLO BULON.6V-(ASSO) R-SEGMENTO SPINOTTO CIRCLIP, PISTON PIN	SICHERUNGSRING CLIPS AXE PISTON	1 2 3 4 5 6 7 8 9 A B C D E F G H I J K L M N O	
06A		00H02512013	CULATA TESTATA CYLINDER HEAD	ZYLINDERKOPF CULASSE	1 2 3 4 5 6 7 8 9 A B C D E F G H I J K L M N O	
07A		00H02505021	JUNTA CULATA. GUARNIZIONE TESTATA GASKET CYLINDER HEAD	ZYLINDERKOPFDICHTUNG JOINT DE CULASSE	1 2 3 4 5 6 7 8 9 A B C D E F G H I J K L M N O	

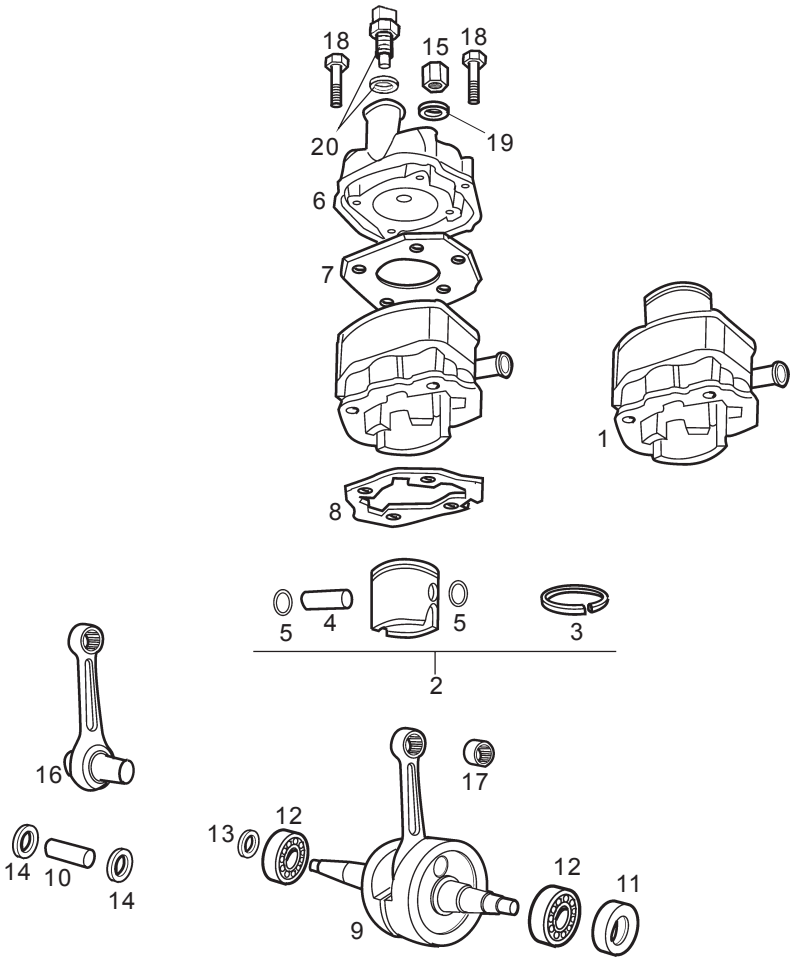

Fig.	Ver.	COD. KOD.	DESCRIPCIÓN DENOMINAZIONE NAME	BEZEICHNUNG DESIGNATION	MOD.	NOTAS NOTES NOTA MITSCHRIFT NOTES
08A		00H02500041	JUNTA CILINDRO. GUARNIZIONE CILINDRO GASKET, CYLINDER	ZYLINDERPUBDICHTUNG JOINT DE CYLINDRE	1 2 3 4 5 6 7 8 9 A B C D E F G H I J K L M N O	
09A		00H02506141	CTO.CIGÑ.-BIELA. COMPLESSO ALBERO GOMITO-BIELLA CRANK SHAFT ROD.	KURBELWELLE VILEBREQUIN COMPLET	1 2 3 4 5 6 7 8 9 A B C D E F G H I J K L M N O	
10A		00002025190	EJE CUELLO CIGÑAL.16.4-6V. ASSE COLLO ALBERO GOMITO 16.4- CRANKSHAFT PIN	PLEUEL BOLZEN AXE DE VILLEBREQUIN	1 2 3 4 5 6 7 8 9 A B C D E F G H I J K L M N O	
11A		00H02500301	RETEN CIGÑAL.DCH.20.35.7. GIUNTO TENUTA ALBERO GOMITO DE SEAL, CRANKSHAFT	KURBELWELLEN DICHTRING REC JOINT SPI VILO D.	1 2 3 4 5 6 7 8 9 A B C D E F G H I J K L M N O	
12A		00059220400	COJINETE 6204 PX2 V4 CUSCINETTO 6204 PX2 V4 BEARING	LAGER 6055 25.47.12 2RS COUSSINET 6005 25-47-12 2RS	1 2 3 4 5 6 7 8 9 A B C D E F G H I J K L M N O	
13A		00E02500231	RETEN CIGUENAL SCOO.74,20.35.7 GIUNTO TENUTA ALBERO GOMITO SC SEAL, OUTPUT SHAFT	SIMMERRING JOINT SPI VILO G.20X35X7	1 2 3 4 5 6 7 8 9 A B C D E F G H I J K L M N O	
14A		00002225220	ARAND.REG.CAB.BIELA.74CC.CROSS RONDELLA REGOLAZIONE TESTA BIE THRUST WASHER	SCHEIBE RONDELLE TETE DE BIELLE	1 2 3 4 5 6 7 8 9 A B C D E F G H I J K L M N O	
15A		00008202730	TCA.FIJ.MANILL.-CULATA.VARIANT DADO FISSAGGIO .MANUBRIO-TESTA HANDLEBAR LOCK NUT	MUTTER ECROU DE FIXATION DU GUIDON	1 2 3 4 5 6 7 8 9 A B C D E F G H I J K L M N O	
16A		00H05001011	R-CTO.BIELA. R-COMPLESSO BIELLA CONNECTING ROD W/BEARING AND P	PLEUEL BIELLE AVEC CAGE ET AXE	1 2 3 4 5 6 7 8 9 A B C D E F G H I J K L M N O	
17A		00002125170	JAULA PIE BIELA.KBK-12.15.15. GABBIA PIEDE BIELLA KBK12.15.1 BEARING, PISTON PIN	NADELLAGER CAGE A AIGUILLE DE PIED DE	1 2 3 4 5 6 7 8 9 A B C D E F G H I J K L M N O	

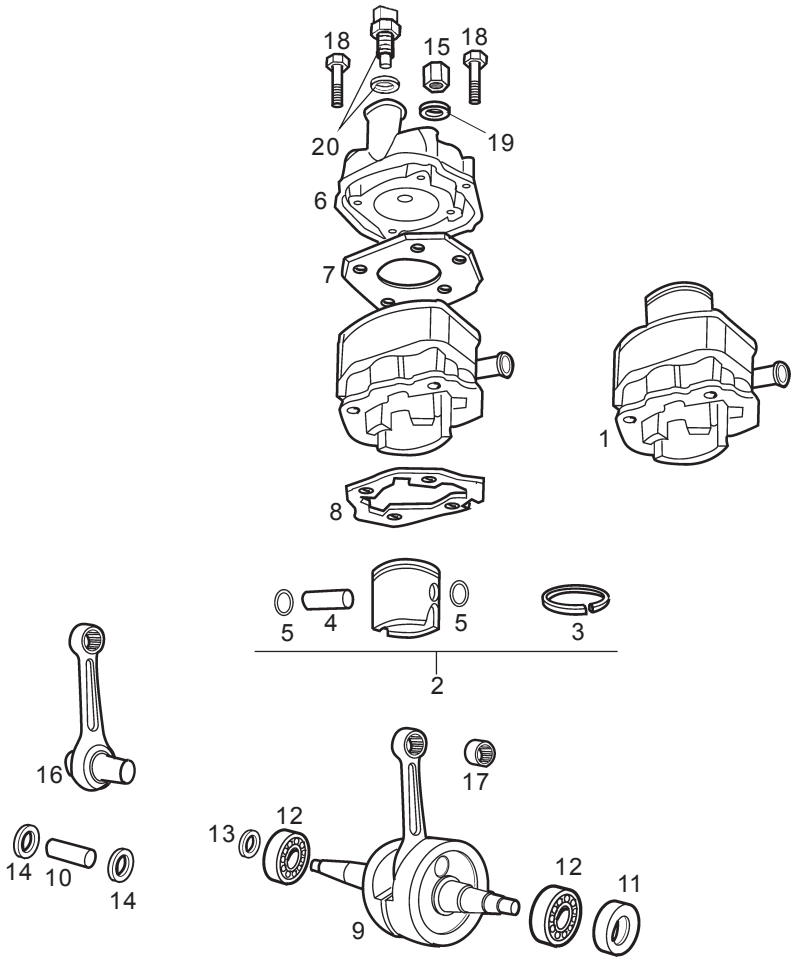

Fig.	Ver.	COD. KOD.	DESCRIPCIÓN DENOMINAZIONE NAME	BEZEICHNUNG DESIGNATION	MOD.	NOTAS NOTES NOTA MITSCHRIFT NOTES
18A		00G03001091	TOR.FIJ.CARTERS.(6X35) VITE FISSAGGIO CARTER (6X35) CRANKCASE SECURING SCREW	BEF.-SCHRAUBE MOTORGEHAUSE BOULON SERRAGE CARTERS	1 2 3 4 5 6 7 8 9 A B C D E F G H I J K L M N O	
19A		00003125280	ARAND.FIJ.CULATA. RONDELLA FISSAGGIO TESTATA SECURING WASHER, CYLINDER HEAD	SCHEIBE ZYLINDERKOPF RONDELLE DE FIXATION DE LA	1 2 3 4 5 6 7 8 9 A B C D E F G H I J K L M N O	
20A		00H02302441	TERMOCONTACTO TERMOCONTATTO THERMO CONTACT	THERMOKONTAKT TERMO-CONTATC	1 2 3 4 5 6 7 8 9 A B C D E F G H I J K L M N O	

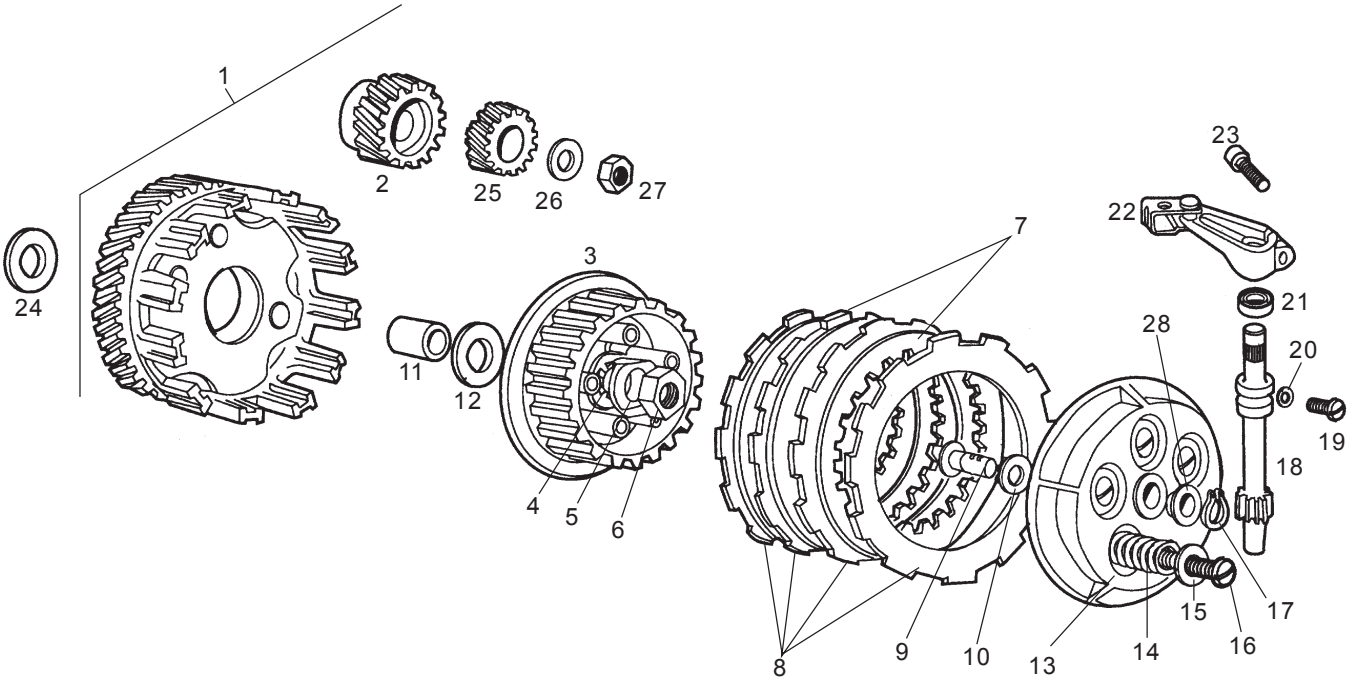

Fig.	Ver.	COD. KOD.	DESCRIPCIÓN DENOMINAZIONE NAME	BEZEICHNUNG DESIGNATION	MOD.	NOTAS NOTES NOTA MITSCHRIFT NOTES
01A		00H03603521	R-CTO.RUEDA AMORT.EMBRAG. R-COMPLESSO RUOTA FRIZIONE CLUTCH HOUSING AND DAMPER	KUPPLUNGSRAD CLOCHE EMBRAYAGE AVEC PIGNO	1 2 3 4 5 6 7 8 9 A B C D E F G H I J K L M N O	
02A		00H02601381	PIÑON MOTOR.Z-22. PIGNONE MOTORE .Z-22. PRIMAY GEAR	MOTORRITZEL PIGNON PRIMAIRE Z-22	1 2 3 4 5 6 7 8 9 A B C D E F G H I J K L M N O	
03A		00H02600111	CAMPANA CONDUCIDA.4-6V.A.A. CAMPANA GUIDATA 4-6V.A.A. CLUTCH HUB.	GLOCKE TAMBOUR EMBRAYAGE	1 2 3 4 5 6 7 8 9 A B C D E F G H I J K L M N O	
04A		00H05000281	ARAND.TOPE PIÑON INTERMD. RONDELLA FERMO PIGNONE INTERM. THRUST PLATE	SCHEIBE RONDELLE DE BUTEE	1 2 3 4 5 6 7 8 9 A B C D E F G H I J K L M N O	
05A		00006826230	PRECTO.TCA.EMBRG. PIASTRINA DADO FRIZIONE WASHER, RETAINING	SICHERUNG FREIN D'ECROU D'EMBRAYAGE	1 2 3 4 5 6 7 8 9 A B C D E F G H I J K L M N O	
06A		00000326260	TCA.EMBRG.4V.ANT./COPPA. DADO FRIZIONE 4V.ANTERIORE/COP CLUTCH NUT	MUTTER ECROU D'EMBRAYAGE	1 2 3 4 5 6 7 8 9 A B C D E F G H I J K L M N O	
07A		00H02600151	DISCO CONDUCIDO DISCO GUIDATO 74/80CC DRIVEN CLUTCH PLATE	SCHEIBE DISQUE EMBRAYAGE LISSE	1 2 3 4 5 6 7 8 9 A B C D E F G H I J K L M N O	
08A		00H02601161	SCTO.DISCO CONDUCTOR. SUBCOMPLESSO DISCO GUIDA CLUTCH PLATE	KUPPLUNGSRELAG DISQUE EMBRAYAGE GARNI	1 2 3 4 5 6 7 8 9 A B C D E F G H I J K L M N O	
09A		00H02600271	CREMALLERA EMPUJE EMBRG. CREMAGLIERA SPINTA FRIZIONE. PUSHING CLUTCH	ZAHNSTANGE CREMAILLETE D,EMBRAYAGE	1 2 3 4 5 6 7 8 9 A B C D E F G H I J K L M N O	
10A		00H02600551	RODAMTO.AXIAL CREMALL.EMBRG. CUSCINETTO SFERE RADIALE CREMA BALL BEARING	LAGER ROULEMENT AXIAL	1 2 3 4 5 6 7 8 9 A B C D E F G H I J K L M N O	
11A		00H02601011	CASQ.BUJE EMBRAGUE. GHIERA BRONZINA FRIZIONE BUSHING	FUHRUNGSBUCHSE GABELSCHENK ENTRETOISE	1 2 3 4 5 6 7 8 9 A B C D E F G H I J K L M N O	

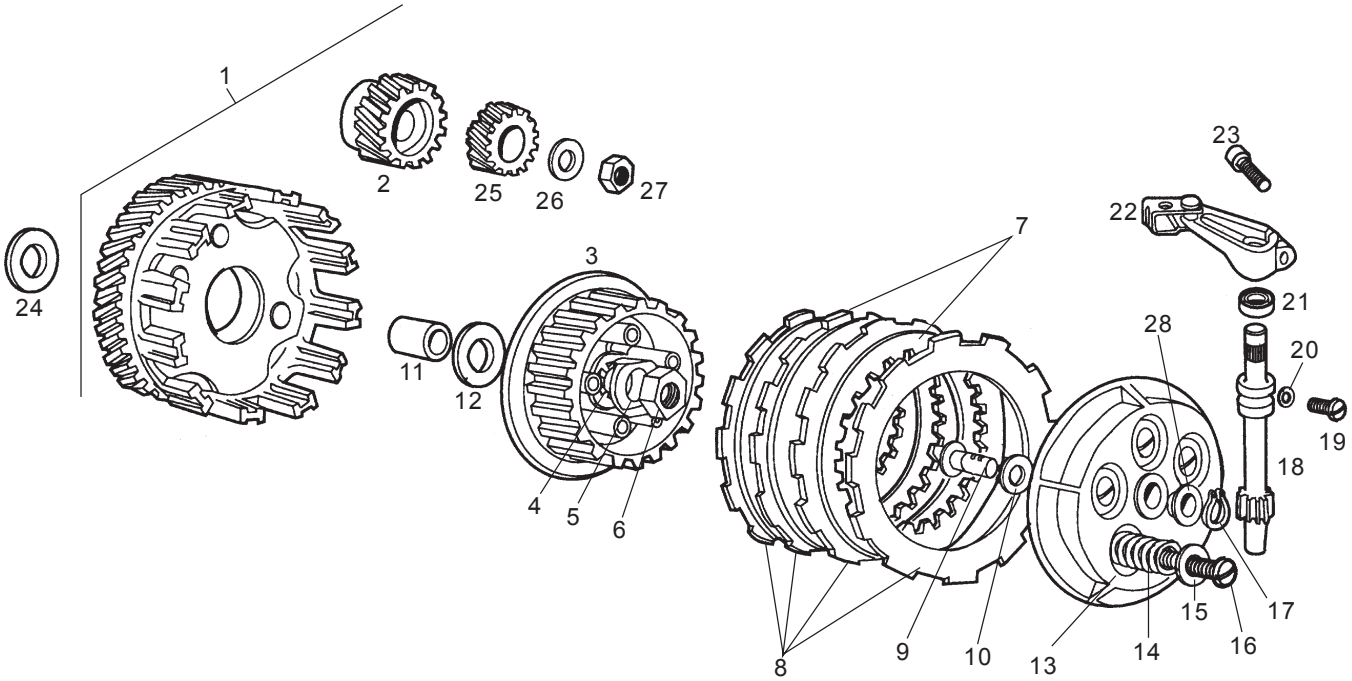

Fig.	Ver.	COD. KOD.	DESCRIPCIÓN DENOMINAZIONE NAME	BEZEICHNUNG DESIGNATION	MOD.	NOTAS NOTES NOTA MITSCHRIFT NOTES
12A		00D02600552	ARAND.ROZAMTO.CAMPANA. RONDELLA ATTRITO CAMPANA WASHER, SPLINED	SCHEIBE RONDELLE ETOILEE	1 2 3 4 5 6 7 8 9 A B C D E F G H I J K L M N O	
13A		00H02600181	TAPA CIERRE EMBRAG.6V. COPERCHIO CHIUSURA FRIZIONE G. OUTER CLUTCH PLATE	KUPPLINGS-VERSCHLUSSDECKEL PLATEAU EXTERIEUR D,EMBRAYA	1 2 3 4 5 6 7 8 9 A B C D E F G H I J K L M N O	
14A		00H02600211	MUELLE REGULAC.EMBRAGUE MOLLA REGOLAZIONE FRIZIONE CLUTCH SPRING	STELLFEDER RESORT REGLAGE	1 2 3 4 5 6 7 8 9 A B C D E F G H I J K L M N O	
15A		00D02600631	ARAND.TOPE MUELLE EMBRG.4-6V. RONDELLA FERMO MOLLA FRIZIONE CLUTCH SPRING STOP WASHER	SCHEIBE ROND.BUTEE RESSORT EMBRAYA.	1 2 3 4 5 6 7 8 9 A B C D E F G H I J K L M N O	
16A		00012053500	TOR.C/RED.CRUZ.5M80X35.DIN7985 VITE TONDO CROCE.5M80X35.DIN79 SCREW M5X35	SCHRAUBE VIS 5M80X35	1 2 3 4 5 6 7 8 9 A B C D E F G H I J K L M N O	
17A		00000047110	ANILLO SEG.EJES D10.DIN-471. ANELLO SICUREZZA ASSI D10 D-47 CIRCLIP, BRAKE SHOE RETENTION	SEEGERRING CIRCLIP POUR AXE D10	1 2 3 4 5 6 7 8 9 A B C D E F G H I J K L M N O	
18A		00H02610311	EJE DESEMBRAGUE.74CC. ASSE DISINNESCO FRIZIONE CLUTCH SHAFT	KUPPLUNGSACHSE AXE	1 2 3 4 5 6 7 8 9 A B C D E F G H I J K L M N O	
19A		00H02600342	TOR.FIJ.EJE DESEMB. VITE FISSAGGIO DISINNESCO FRIZ SHAFT FIXING BOLT	BEF.-SCHRAUBE VIS	1 2 3 4 5 6 7 8 9 A B C D E F G H I J K L M N O	
20A		00H03800441	ARAND.TOR.VACIADO AGUA RONDELLA VITE SVUOTAMENTO ACQU WASHER	SCHEIBE RONDELLE	1 2 3 4 5 6 7 8 9 A B C D E F G H I J K L M N O	
21A		00002027280	RET.EJE MANDO SELEC.12.20.5. RICHIAMO ASSE COMANDO SELETTOR OIL SEAL, SELECTOR SHAFT	SIMMERRING JOINT ANTI-FUITE	1 2 3 4 5 6 7 8 9 A B C D E F G H I J K L M N O	
22A		00H02600322	SCTO.PALANCA DESEMBRG. SUBCOMPLESSO LEVA DISINNESCO F CLUTCH LEVER	KUPPLUNGSHEBEL LEVIER EMBRAYAGE	1 2 3 4 5 6 7 8 9 A B C D E F G H I J K L M N O	

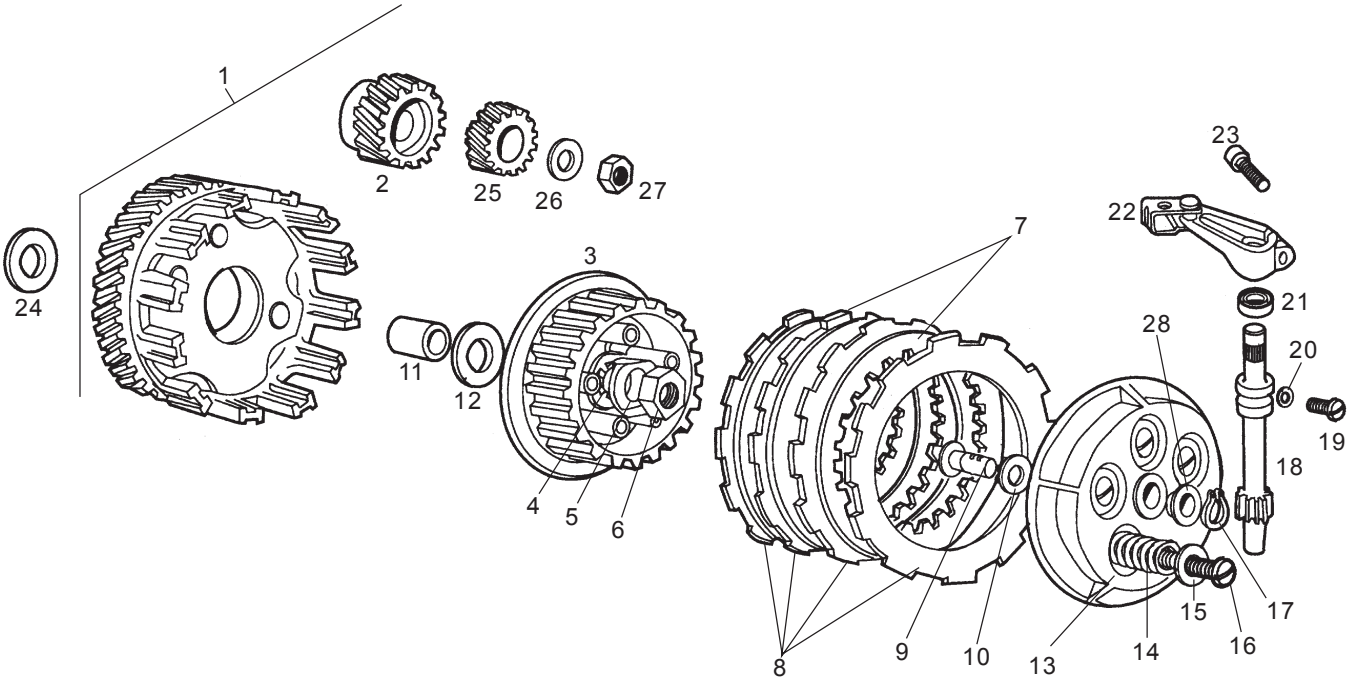

Fig.	Ver.	COD. KOD.	DESCRIPCIÓN DENOMINAZIONE NAME	BEZEICHNUNG DESIGNATION	MOD.	NOTAS NOTES NOTA MITSCHRIFT NOTES
23A		00052062011	TOR. 6M100X20 D.7380 VITE TESTA ALLEN 6M100X20 HEX.SOCKET-HEAD SCREW6M100X20	INBUSSCHRAUBE VIS T. CREUSE	1 2 3 4 5 6 7 8 9 A B C D E F G H I J K L M N O	
24A		00002026020	ARAND.PROTEC.INT.BUJE EMBRAG. RONDELLA PROTEZIONE INTERNA BR WASHER, CLUTCH HUB	SCHEIBE RONDELLE ENTRETOISE	1 2 3 4 5 6 7 8 9 A B C D E F G H I J K L M N O	
25A		00H03800181	PIÑON MANDO BOMBAS.Z-14.7 PIGNONE COMANDO POMPE .Z-14.7 PUMP GUIDE GEAR	RITZEL PIGNON	1 2 3 4 5 6 7 8 9 A B C D E F G H I J K L M N O	
26A		00H02600651	ARAND.FIJ.PIÑON MOTOR RONDELLA FISSAGGIO PIGNONE MOT WASHER	SCHEIBE RONDELLE	1 2 3 4 5 6 7 8 9 A B C D E F G H I J K L M N O	
27A		00H02600401	TCA.FIJ.PIÑON MOTOR DADO FISSAGGIO PIGNONE MOTORE NUT CRANKSHAFT	MUTTER ECROU	1 2 3 4 5 6 7 8 9 A B C D E F G H I J K L M N O	
28A		00H05000281	ARAND.TOPE PIÑON INTERMD. RONDELLA FERMO PIGNONE INTERM. THRUST PLATE	SCHEIBE RONDELLE DE BUTEE	1 2 3 4 5 6 7 8 9 A B C D E F G H I J K L M N O	

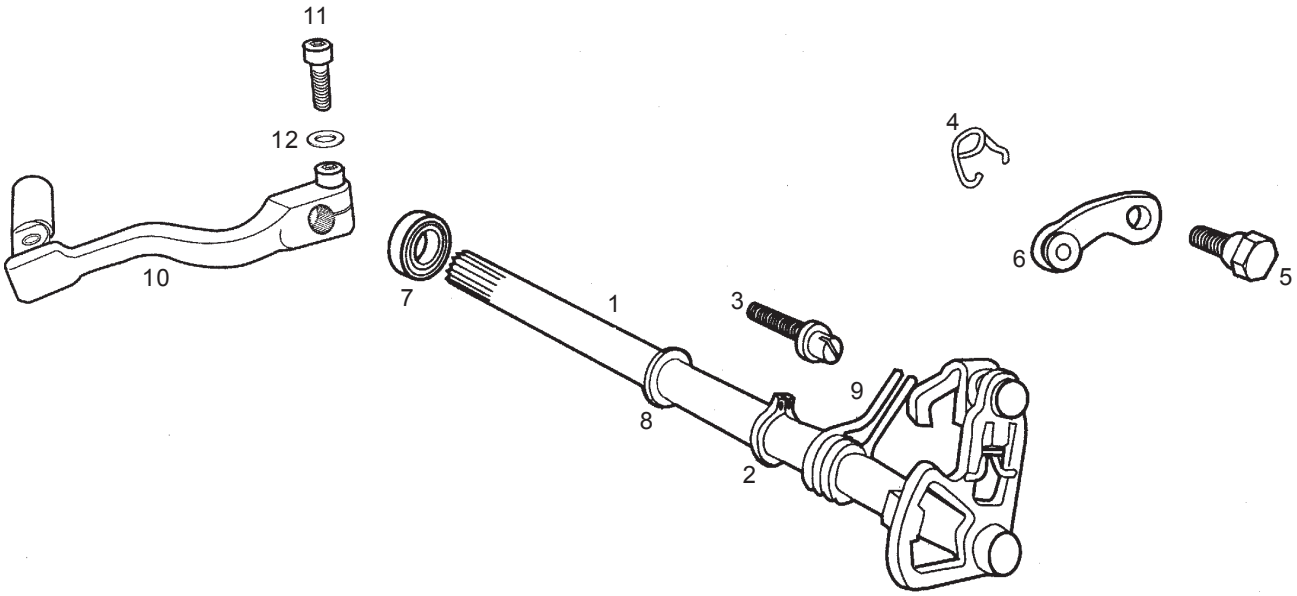

Fig.	Ver.	COD. KOD.	DESCRIPCIÓN DENOMINAZIONE NAME	BEZEICHNUNG DESIGNATION	MOD.	NOTAS NOTES NOTA MITSCHRIFT NOTES
01A		00H02700151	SCTO.EJE SELECTOR. SUBCOMPLESSO ASSE SELETTORE 74 S-ASSY. SELECTOR SHAFT	SCHALTACHSE S-ENSEMBLE AXE SELECTEUR	1 2 3 4 5 6 7 8 9 A B C D E F G H I J K L M N O	
02A		00047031100	ANIL.S.EJES D12.D6799.111013-2 ANELLO SEPARATORE ASSI D12.D6 CIRCLIP, BRAKE SHOE RETENTION	RING CIRCLIP POUR AXE D12	1 2 3 4 5 6 7 8 9 A B C D E F G H I J K L M N O	
03A		00H02700231	ESPARRG.MUELLE SELEC. BULLONE MOLLA SELETTORE SCREW, SELECTOR SPRING ADJ.	FEDERSTIFT AXE EXCENTRIQUE	1 2 3 4 5 6 7 8 9 A B C D E F G H I J K L M N O	
04A		00H02700441	MUELLE FIJ.MARCHAS MOLLA FISSAGGIO MARCE GEAR FIXING SPARING	BEF.-FEDER RESSORT	1 2 3 4 5 6 7 8 9 A B C D E F G H I J K L M N O	
05A		00H02700451	TOR.GUIA FIJ.MARCHAS VITE GUIDA FISSAGGIO MARCE SCREW	INBUSSCHRAUBE MOTOR BEFEST VIS	1 2 3 4 5 6 7 8 9 A B C D E F G H I J K L M N O	
06A		00H02700491	SCTO.PALANCA FIJ.MARCHAS SUBCOMPLESSO LEVA FISSAGGIO MA LEVER FIXING GEARS	GANSCHALTHEEEL LEVIER FIXATION PIGNONS	1 2 3 4 5 6 7 8 9 A B C D E F G H I J K L M N O	
07A		00002027280	RET.EJE MANDO SELEC.12.20.5. RICHIAMO ASSE COMANDO SELETTOR OIL SEAL, SELECTOR SHAFT	SIMMERRING JOINT ANTI-FUITE	1 2 3 4 5 6 7 8 9 A B C D E F G H I J K L M N O	
08A		00002028770	ARAND.SEGURO TAMBOR RONDELLA ASSICURAZIONE TAMBUR WASHER	SCHEIBE RONDELLE	1 2 3 4 5 6 7 8 9 A B C D E F G H I J K L M N O	
09A		00H02700251	MUELLE SELECTOR MOLLA SELETTORE SPRING, SELECTOR	FEDER RESSORT	1 2 3 4 5 6 7 8 9 A B C D E F G H I J K L M N O	
10A		00H02703421	CTO.PALANCA CAMBIO “COMPLESSO LEVA CAMBIO GEARSHIFT ASSY.	GRUPPE GANGSCHALTHEBEL GPR PEDALE DE SELECTEUR	1 2 3 4 5 6 7 8 9 A B C D E F G H I J K L M N O	

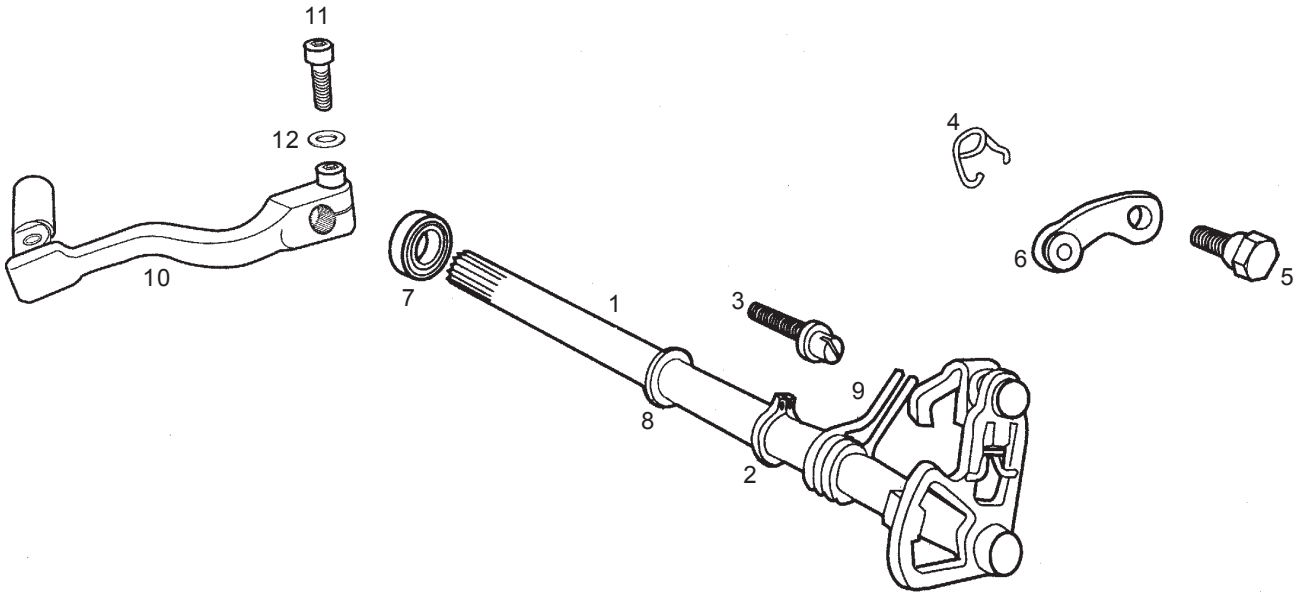

Fig.	Ver.	COD. KOD.	DESCRIPCIÓN DENOMINAZIONE NAME	BEZEICHNUNG DESIGNATION	MOD.	NOTAS NOTES NOTA MITSCHRIFT NOTES
11A		00002062511	TOR.C/ALLEN 6M100X25 D-912 VITE TESTA ALLEN 6M100X25 HEX.SOCKET-HEAD SCREW 6M100X25	INBUSSCHRAUBE VIS T. CREUSE	1 2 3 4 5 6 7 8 9 A B C D E F G H I J K L M N O	
12A		00442060002	ARAND.MUELLE D.6 RONDELLA MOLLA D.6 SPRING WASHER D6	FEDERRING D.6.DIN-127-B RONDELLE A RESSORT D6	1 2 3 4 5 6 7 8 9 A B C D E F G H I J K L M N O	

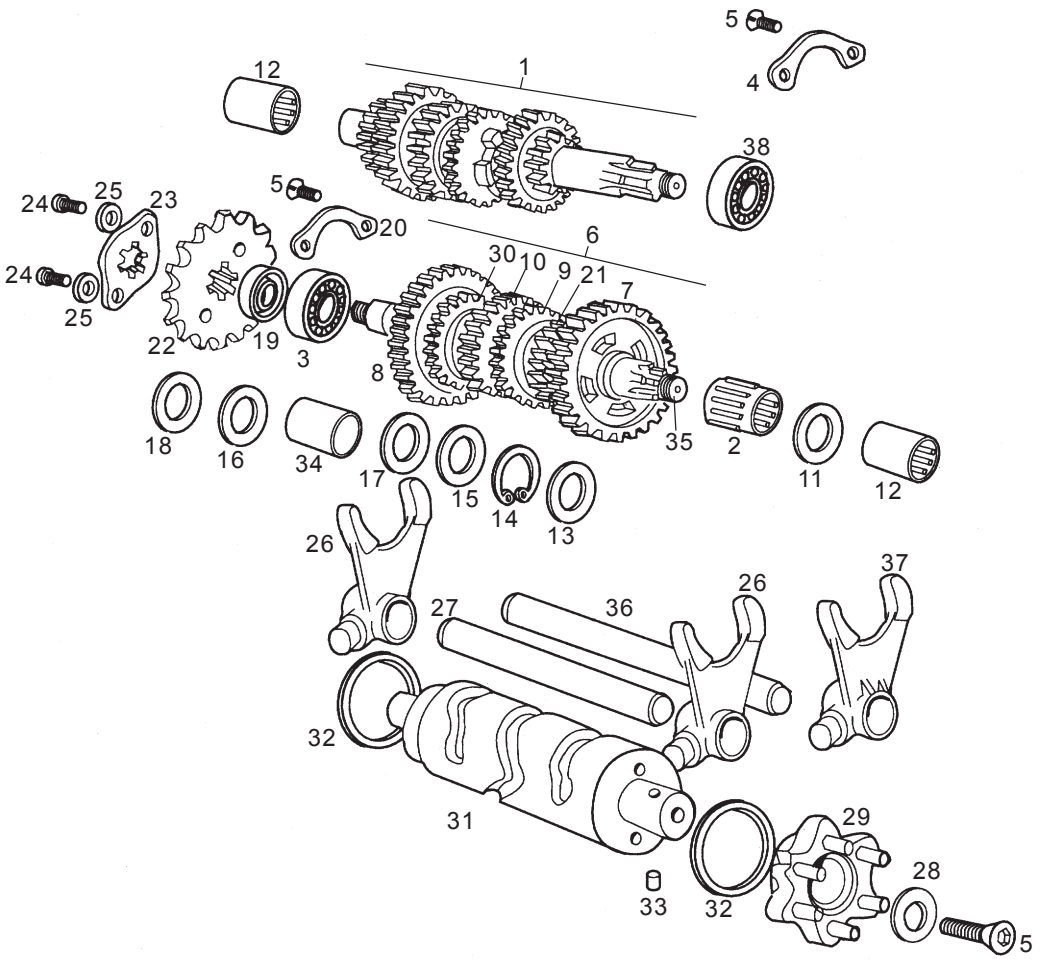

Fig.	Ver.	COD. KOD.	DESCRIPCIÓN DENOMINAZIONE NAME	BEZEICHNUNG DESIGNATION	MOD.	NOTAS NOTES NOTA MITSCHRIFT NOTES
01A		00H02801291	SCTO.EJE PRIMARIO SUBCOMPLESSO ASSE PRIMARIO DRIVE SHAFT.	PRIMARCHSE AXE PRIMAIRE	1 2 3 4 5 6 7 8 9 A B C D E F G H I J K L M N O	
02A		00D02820101	CORONA AGUJ.PIÑ.2-1A.K14X18X8F CORONA RULLINI PIGNONE .2-1A.K NEEDLE BEARING	BADELLGER ROULEMENT AIGUILLES	1 2 3 4 5 6 7 8 9 A B C D E F G H I J K L M N O	
03A		00057120300	COJINETE 6203-C4.17.40.12 R1.5 CUSCINETTO 6203-C4.17.40.12. BEARING	LAGER 6055 25.47.12 2RS COUSSINET 6005 25-47-12 2RS	1 2 3 4 5 6 7 8 9 A B C D E F G H I J K L M N O	
04A		00H02800901	PREC.COJINETE EJE PRIM. PIASTRINA CUSCINETTO ASSE PRIM PLATE POSITION BALL BEARINGS	KUGELLEGERPRIMDRACHSE BUTEE DE ROULEMENT	1 2 3 4 5 6 7 8 9 A B C D E F G H I J K L M N O	
05A		00000013510	TOR.AV.ALL.5M80X10 VITE TESTA SVASATA ALLEN 5M80 ALLEN COUN.HEA SCR.5M80X10	SCHRAUBE VIS TETE FENDEU ALLEN5M80X1	1 2 3 4 5 6 7 8 9 A B C D E F G H I J K L M N O	
06A		00H02805131	CTO.EJE SECUNDARIO COMPLESSO ASSE SECONDARIO OUTPUT SHAFT	SEKUNDARACHSE AXE SECONDAIRE MONTE COMPLE	1 2 3 4 5 6 7 8 9 A B C D E F G H I J K L M N O	
07A		00H02820211	PIÑON SEC.I.Z-34.BI-3. PIGNONE SECONDARIO .I.Z-34.BI OUTPUT GEAR 1ST	RITZEL SEKUNDARACHSE I PIGNON SECONDAIRE I	1 2 3 4 5 6 7 8 9 A B C D E F G H I J K L M N O	
08A		00H02801221	PIÑON SECUND.II.Z-30 PIGNONE SECONDARIO II.Z-30 SECONDARY GEAR	RITZEL SEKUNDARACHSE II PIGNON SECONDAIRE II	1 2 3 4 5 6 7 8 9 A B C D E F G H I J K L M N O	
09A		00H02810231	PIÑON SECUND.III.Z-27.6V. PIGNONE SECONDARIO .III.Z-27.6 OUTPUT GEAR 3RD.	RITZEL SEKUNDARACHSE III PIGNON 3 (ARBRE SEGONDAIRE)	1 2 3 4 5 6 7 8 9 A B C D E F G H I J K L M N O	
10A		00H02801481	PIÑON SECUND.IV.Z-24 PIGNONE SECONDARIO.IV.Z-24 SECONDARY GEAR	RITZEL SEKUNDARACHSE II PIGNON SECONDAIRE II	1 2 3 4 5 6 7 8 9 A B C D E F G H I J K L M N O	
11A		00H02800181	ARAND.REGLAJE EJE SECUNDARIO RONDELLA ATTRITO PIGNONE PRIMA WASHER	SCHEIBE RONDELLE	1 2 3 4 5 6 7 8 9 A B C D E F G H I J K L M N O	

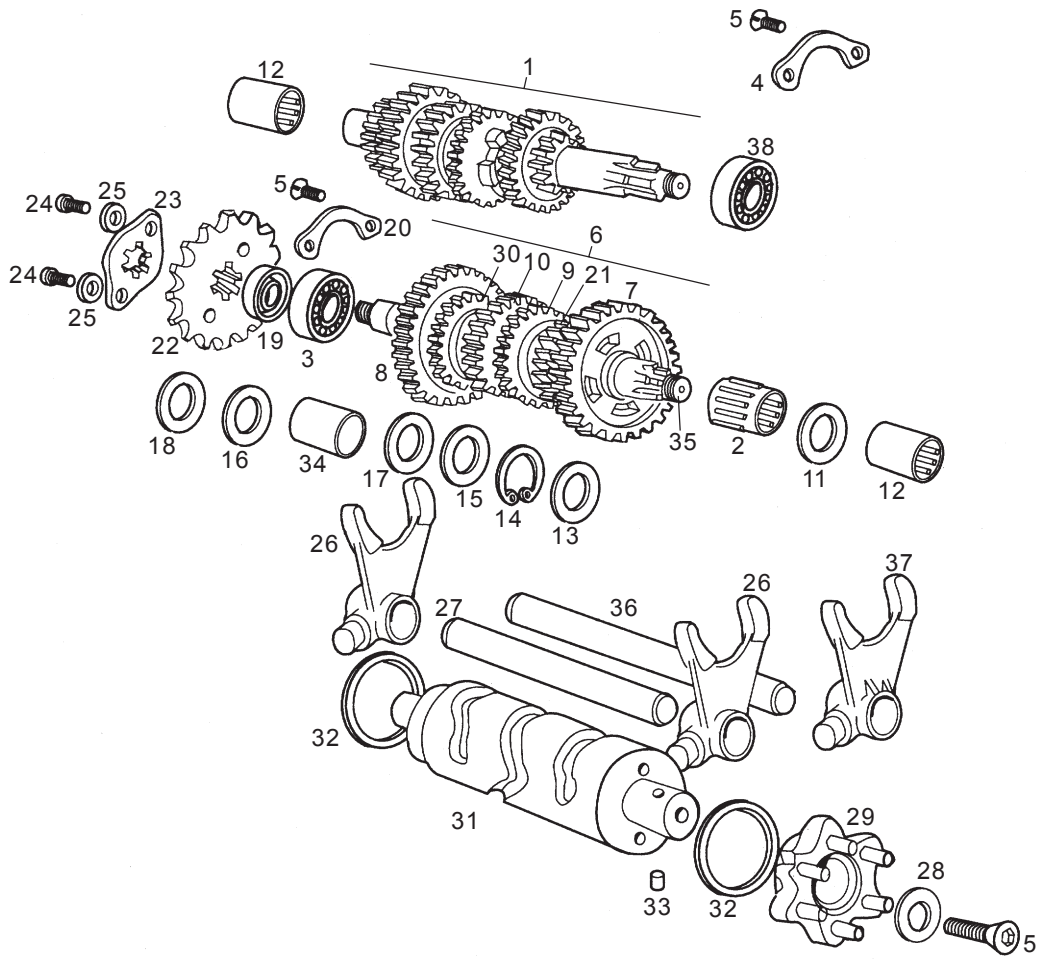

Fig.	Ver.	COD. KOD.	DESCRIPCIÓN DENOMINAZIONE NAME	BEZEICHNUNG DESIGNATION	MOD.	NOTAS NOTES NOTA MITSCHRIFT NOTES
12A		00002028450	CASQ.AGUJAS EJES I-II.HK-1412. GHIERA RULLINI ASSI I-II.HK-1 NEEDLE BEARING, GEAR SHAFTS	NADELLGER CAGE A AIGUILLES	1 2 3 4 5 6 7 8 9 A B C D E F G H I J K L M N O	
13A		00H02800251	ARAND.ROZAMTO.PIÑON SECUND.I RONDELLA ATTRITO PIGNONE SECON WASHER	SCHEIBE RONDELLE	1 2 3 4 5 6 7 8 9 A B C D E F G H I J K L M N O	
14A		00002028550	ANILLO SEG.PIÑONES.D18. ANELLO SICUREZZA PIGNONI D18 CIRCLIP D 18	SICHERUNGSRING JONC D'ARBRE	1 2 3 4 5 6 7 8 9 A B C D E F G H I J K L M N O	
15A		00H02800561	ARAND.PIÑS.SECUND.III/IV.A.A. RONDELLA PIGNONI SECONDARIO .I WASHER	SCHEIBE RONDELLE	1 2 3 4 5 6 7 8 9 A B C D E F G H I J K L M N O	
16A		00H02810561	ARAND.ROZMTO.PIÑ.PRIM.V. RONDELLA ATTRITO PIGNONE PRIMA WASHER.	SCHEIBE JOUE CALAGE PIGNON	1 2 3 4 5 6 7 8 9 A B C D E F G H I J K L M N O	
17A		00H02820561	ARAND.ROZAMT.PIÑON SEC.II. RONDELLA ATTRITO PIGNONE SECON WASHER	SCHEIBE JOUE CALAGE PIGNON	1 2 3 4 5 6 7 8 9 A B C D E F G H I J K L M N O	
18A		00H02810181	ARAND.COJINT.EJE SECUNDARIO RONDELLA CUSCINETTO ASSE SECON LAYSHAFT BEARING WASHER	SCHEIBE KUGELLAGER RONDELLE	1 2 3 4 5 6 7 8 9 A B C D E F G H I J K L M N O	
19A		00H02800401	RETEN.PIÑON SALIDA CAMB. GIUNTO TENUTA PIGNONE USCITA C SEAL SSPROCKET	DICHTRING JOINT SPI PIGNON	1 2 3 4 5 6 7 8 9 A B C D E F G H I J K L M N O	
20A		00002028900	PRECTO.COJNTS.EJES PRIM./SEC. PIASTRINA CUSCINETTI ASSI PRIM PLATE POSITION, BALL BEARINGS	SICHERUNG BUTEE DE ROULEMENT	1 2 3 4 5 6 7 8 9 A B C D E F G H I J K L M N O	
21A		00H02810411	PIÑON SECUND.V.Z-23.6V. PIGNONE SECONDARIO V.Z-23 OUTPUT GEAR 5TH.	RITZEL SECUNDTRACHSE V PIGNON DE 5 (ARBRE SECONDAI	1 2 3 4 5 6 7 8 9 A B C D E F G H I J K L M N O	
22A		00F02804371	PIÑON SALIDA CAMB.Z-13 PIGNONE USCITA CAMBIO Z-13 GEARBOX OUTPUT PINION Z-13	GANGSCHALT. AUSGANGSRIT Z-13 PIGNON SORTIE CHANGEMENT Z-13	1 2 3 4 5 6 7 8 9 A B C	

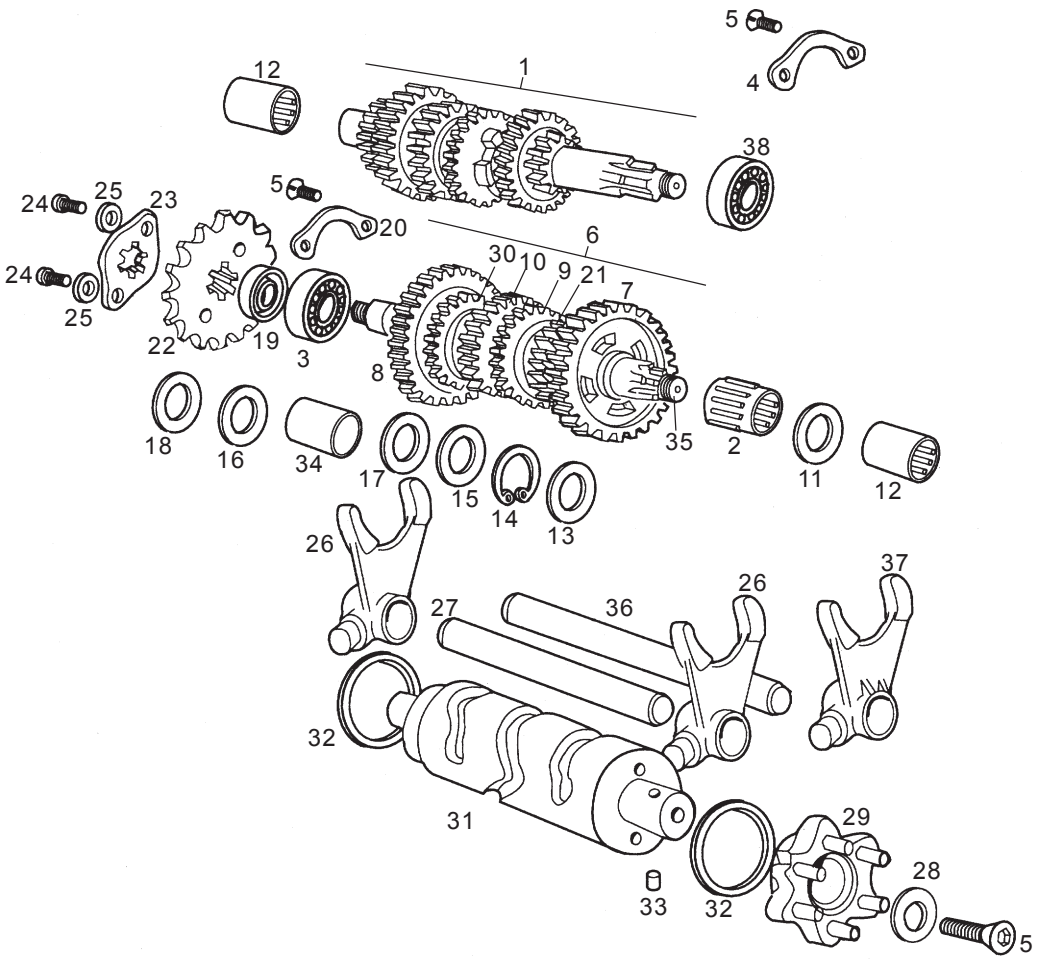

Fig.	Ver.	COD. KOD.	DESCRIPCIÓN DENOMINAZIONE NAME	BEZEICHNUNG DESIGNATION	MOD.	NOTAS NOTES NOTA MITSCHRIFT NOTES
22B		00H02805371	PIÑON SALIDA CAMB.Z-14 PIGNONE USCITA CAMBIO Z-14 GEARBOX OUTPUT PINION Z-14	GANGSCHALT. AUSGANGSRIT Z-14 PIGNON SORTIE CHANGEMENT Z-14	D E F G H I J K L M N O	
23A		00H02810421	PREC.PIÑON SALIDA CAMB.50.4V PIASTRINA PIGNONE USCITA CAMBI LOCKWASHER, COUNTERSHAFT SPROK	RITZEL RONDELLE DE SECURITE SBV.	1 2 3 4 5 6 7 8 9 A B C D E F G H I J K L M N O	
24A		00000004512	TOR.C/ALLEN 5M80X12NEGRO VITE TESTA ALLEN 5M80X12 NERO ALLEN SCREW M5X12	INBUSSCHRAUBE 5M80X12 VIS A TETE CREUSE 5M80X12 N	1 2 3 4 5 6 7 8 9 A B C D E F G H I J K L M N O	
25A		00000034050	ARAND.PLANA MEC.D.5.DIN125-B RONDELLA PIATTA D5 MACHINED FLAT WASHER D5	SCHEIBE D.5 DIN-125 ROND.PLATE MECANISEE D.5.DI	1 2 3 4 5 6 7 8 9 A B C D E F G H I J K L M N O	
26A		00H02820651	HORQ.SECUNDARIA.4-6V. FORCELLA SECONDARIA 4-6V. FORK OUTPUT	SHALTGABEL FOURCHETTE	1 2 3 4 5 6 7 8 9 A B C D E F G H I J K L M N O	
27A		00H02800881	EJE HORQ.SECUNDARIA ASSE FORCELLA SECONDARIA FORK SHAFT	GABEL SEKUNDARACHSE AXE SECUNDARY	1 2 3 4 5 6 7 8 9 A B C D E F G H I J K L M N O	
28A		00H02800801	ARAND.PIÑ.CONTR/MAND.TAMBOR RONDELLA PIGNONE CONTROLLO COM SCREW	INBUSSCHRAUBE MOTOR BEFEST VIS	1 2 3 4 5 6 7 8 9 A B C D E F G H I J K L M N O	
29A		00H02810631	CABEZA MANDO TAMBOR TESTA COMANDO TAMBURO DRUM HEAD	ESTEUERKOPF TETE TAMBOUR SELECTEUR	1 2 3 4 5 6 7 8 9 A B C D E F G H I J K L M N O	
30A		00H02810741	PIÑON SECUND.VI.Z-22.6V. PIGNONE SECONDARIO VI.Z-22.6V. OUTPUT GEAR 6TH.	RITXEL SEKUNDARACHSE VI PIGNON DE 6 (ARBRE SECONDAI	1 2 3 4 5 6 7 8 9 A B C D E F G H I J K L M N O	
31A		00H02802861	TAMBOR DISTRIBUIDOR TAMBURO DISTRIBUTORE SHIFT DRUM	VERTEILERTROMMEL BARILLET	1 2 3 4 5 6 7 8 9 A B C D E F G H I J K L M N O	
32A		00D04000291	ARAND.TAMBOR DISTRIBD.0,5.4/6V RONDELLA TAMBURO DISTRIBUTORE WASHER 0,5 4-6V.	SCHEIBE RONDELLE DE REGLAJE DU TAMB	1 2 3 4 5 6 7 8 9 A B C D E F G H I J K L M N O	

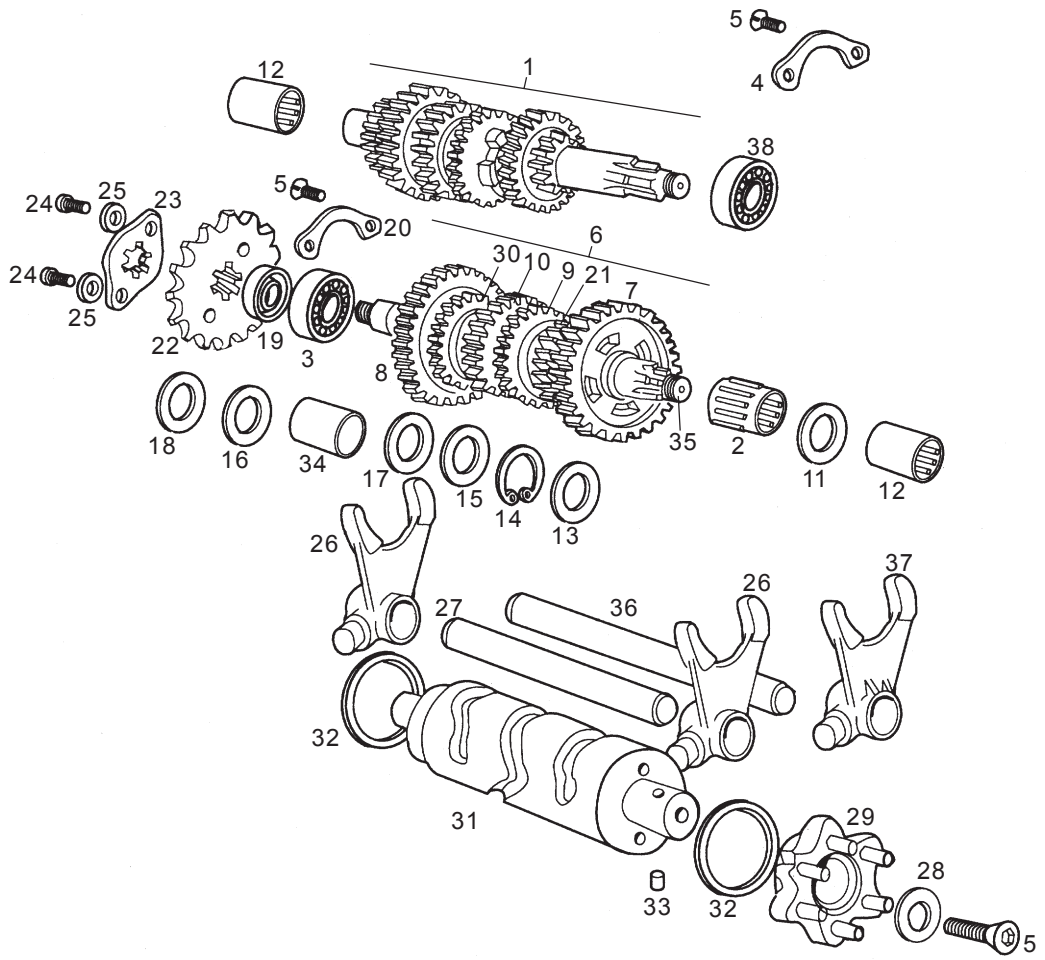

Fig.	Ver.	COD. KOD.	DESCRIPCIÓN DENOMINAZIONE NAME	BEZEICHNUNG DESIGNATION	MOD.	NOTAS NOTES NOTA MITSCHRIFT NOTES
33A		00000066060	RODILLO.4X6. RULLO 4X6 ROLLER 4X6	WALZE FUR SCHA LTUNG GALETS 4X6	1 2 3 4 5 6 7 8 9 A B C D E F G H I J K L M N O	
34A		00H02800241	CASQ.PIÑON SECUND.II. GHIERA PIGNONE SECONDARIO .II. BUSHING	FUHRUNGSBUCHSE GABELSCHENK ENTRETOISE	1 2 3 4 5 6 7 8 9 A B C D E F G H I J K L M N O	
35A		00H02802161	EJE SECUND.6V ASSE SECONDARIO 6V OUTPUT SHAFT	SEKUNDARACHSE AXE SECONDAIRE MONTE COMPLE	1 2 3 4 5 6 7 8 9 A B C D E F G H I J K L M N O	
36A		00H02800891	EJE HORQ.PRIMARIA. ASSE FORCELLA PRIMARIA PRIMARY FORK SHAFT	GABEL PRIMARACHSE AXE	1 2 3 4 5 6 7 8 9 A B C D E F G H I J K L M N O	
37A		00H02820661	HORQ.PRIMARIA.V-VI FORCELLA PRIMARIA V-VI. FORK OUTPUT	SHALTGABEL FOURCHETTE	1 2 3 4 5 6 7 8 9 A B C D E F G H I J K L M N O	
38A		00058020301	COJINETE 6203-C4.17.40.12 R1.5 CUSCINETTO 6203-C4.17.40.12. BEARING	LAGER 6203-C3 17.40.12 COUSSINET 6203-C3 17.40.12	1 2 3 4 5 6 7 8 9 A B C D E F G H I J K L M N O	

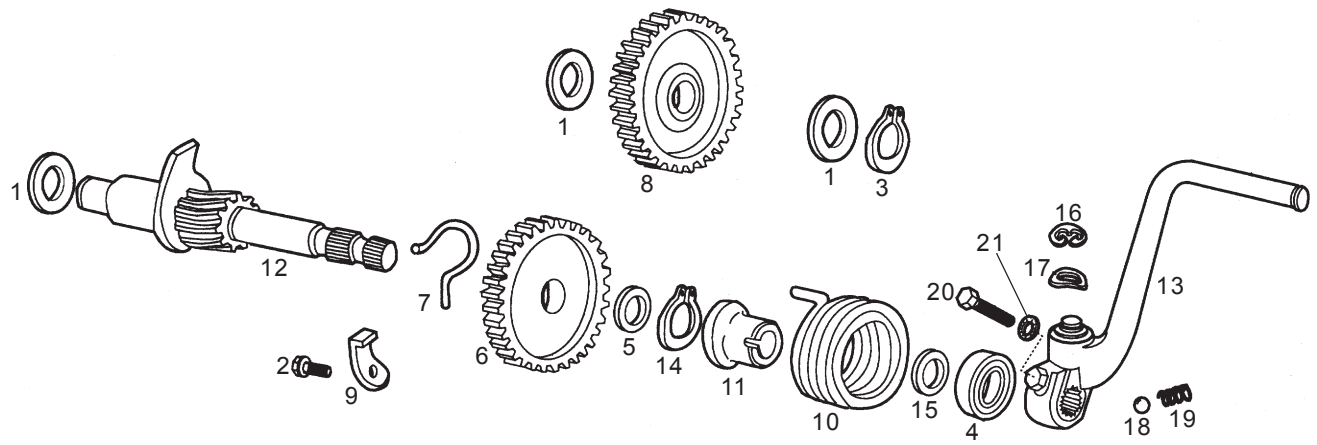

Fig.	Ver.	COD. KOD.	DESCRIPCIÓN DENOMINAZIONE NAME	BEZEICHNUNG DESIGNATION	MOD.	NOTAS NOTES NOTA MITSCHRIFT NOTES
01A		00002028770	ARAND.SEGURO TAMBOR RONDELLA ASSICURAZIONE TAMBUR COPPA WASHER	SCHEIBE RONDELLE	1 2 3 4 5 6 7 8 9 A B C D E F G H I J K L M N O	
02A		00H02900761	TOR.FIJ.TOPE ARRQ.SDA/FEN.6X10 VITE SCREW	INBUSSCHRAUBE MOTOR BEFEST VIS	1 2 3 4 5 6 7 8 9 A B C D E F G H I J K L M N O	
03A		00000047111	ANILLO SEG.EJES D11.DIN-471. ANELLO SICUREZZA ASSI D11.DIN- CIRCLIP, SELECTOR SHAFT	SICHERHEITSPRING CIRCLIPS ARBRE SELECTEUR	1 2 3 4 5 6 7 8 9 A B C D E F G H I J K L M N O	
04A		00D02910131	RETEN EJE ARRANQUE 15-26-5 ANELLO TENUTA AVVIAMENTO 15-26 OIL SEAL 15-26-5	SIMMERING JOINT ANTI-FUITE	1 2 3 4 5 6 7 8 9 A B C D E F G H I J K L M N O	
05A		00005529290	ARAND.TOPE PIÑ.ARRQ. RONDELLA FERMO PIGNONE AVVIAME WASHER	SCHEIBE RONDELLE	1 2 3 4 5 6 7 8 9 A B C D E F G H I J K L M N O	
06A		00H02900091	PIÑON ARRANQUE Z-29 PIGNONE AVVIAMENTO Z-29 KICKSTARTER GEAR Z-29	ANLAUFRITZEL ROUE DE MISE EN MARCHE Z-29	1 2 3 4 5 6 7 8 9 A B C D E F G H I J K L M N O	
07A		00H02900281	MUELLE PI§ON ARR. MOLLA PIGNONE AVVIAMENTO SPRING, ENGAGEMENTE REAR	RITZELFEDER RESSORT DE ROUE DE MISE EN	1 2 3 4 5 6 7 8 9 A B C D E F G H I J K L M N O	
08A		00H02901441	PIÑON INTERMED.ARRQ. PIGNONE INTERMEDIO AVVIAMENTO DRIVING GEAR	ANLAUF-ZWISCHENRITZEL ROUE INTERMEDIAIRE	1 2 3 4 5 6 7 8 9 A B C D E F G H I J K L M N O	
09A		00H02901551	REFZO.TOPE ARRQ. RINFORZO FERMO AVVIAMENTO KICKSTARTER LEVER STOP	VERSTARUNG F.ANSCHULAG BUTEE PEDALE DE	1 2 3 4 5 6 7 8 9 A B C D E F G H I J K L M N O	
10A		00H02900041	MUELLE ARRANQUE, MOLLA AVVIAMENTO KICKSTARTER SPRING	ANLAUFFEDER RESSORT DE KICK	1 2 3 4 5 6 7 8 9 A B C D E F G H I J K L M N O	
11A		00H02900271	CAZLTA.GUIA MUELLE ARRQ. SCODELLINO GUIDA MOLLA AVVIAME SPRING GUIDE	FUHRUNGSPFANE RAMPE DE KICK	1 2 3 4 5 6 7 8 9 A B C D E F G H I J K L M N O	

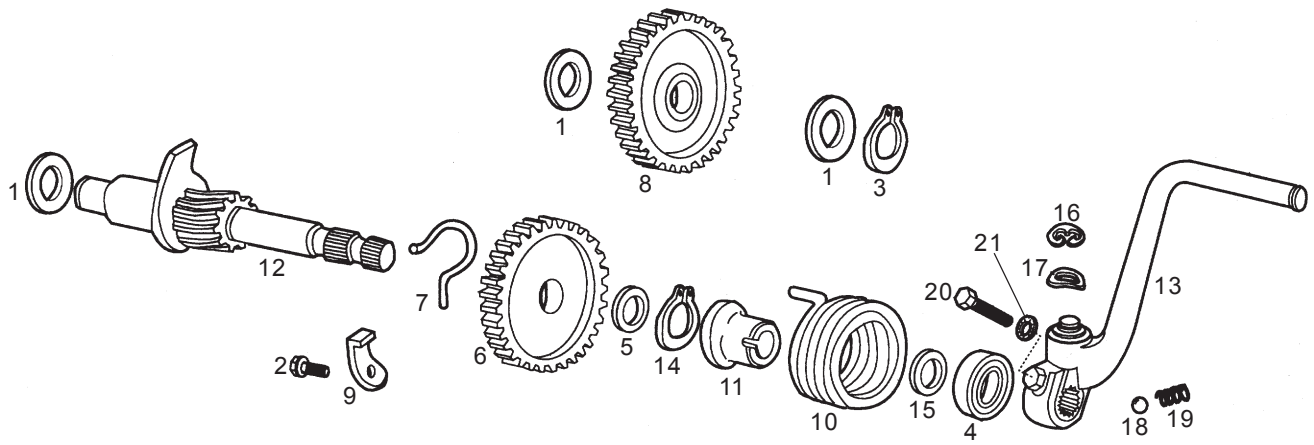

Fig.	Ver.	COD. KOD.	DESCRIPCIÓN DENOMINAZIONE NAME	BEZEICHNUNG DESIGNATION	MOD.	NOTAS NOTES NOTA MITSCHRIFT NOTES
12A		00H02900011	SCTO.EJE ARRANQUE, SUBCOMPLESSO ASSE AVVIAMENTO S KICKSTARTER SHAFT	ANLAUFACHSE ARBRE DE KICK	1 2 3 4 5 6 7 8 9 A B C D E F G H I J K L M N O	
13A		00H02902251	CTO.PALANCA ARRQ. COMPLESSO LEVA AVVIAMENTO KICKSTARTER LEVER	KICKSTARTER LEVIER DE KICK	1 2 3 4 5 6 7 8 9 A B C D E F G H I J K L M N O	
14A		00000047122	ANILLO SEG.EJES D22.DIN-471. RONDELLA SICUREZZA D22.DIN-471 CIRCLIP D22 DIN 471	SICHERHEITSRING ANNEAU SECURITE AXES D22	1 2 3 4 5 6 7 8 9 A B C D E F G H I J K L M N O	
15A		00002029050	ARAND.TOPE ARRQ.4-6V. RONDELLA FERMO AVVIAMENTO 4-6V WASHER	SCHEIBE RONDELLE	1 2 3 4 5 6 7 8 9 A B C D E F G H I J K L M N O	
16A		00047030900	ANILL.SEG/EJ.D9-12 D6799/8 ANELLO SICUREZZA/ASSE D9-12 DI CIRCLIP D9-12 DIN-6799	SICHERHEITSRING ANNEAU SECURITE AXE D.9-12	1 2 3 4 5 6 7 8 9 A B C D E F G H I J K L M N O	
17A		00000036100	ARAND.MUELLE AB.D10,5.DIN137.A RONDELLA MOLLA AB.D10,5.DIN-1 WASHER	SCHEIBE RONDELLE	1 2 3 4 5 6 7 8 9 A B C D E F G H I J K L M N O	
18A		00000061040	BOLA.D.4,76. PALLA D.4,76 BALL, D.4,76	KUGEL D.4,76. BILLE DIAMETRE 4,76.	1 2 3 4 5 6 7 8 9 A B C D E F G H I J K L M N O	
19A		00003127200	MUELLE GATILLOS MOLLA GRILLETTO SPRING, DETENT	FEDER RESSORT	1 2 3 4 5 6 7 8 9 A B C D E F G H I J K L M N O	
20A		00004162500	TOR.C/ALL.6M100X25.NGD912 8.8 VITE LEFT CRANKCASE COVER SECURING	BEF.-SCHRAUBE LI.GEHAEUSEH BOULON SERG.COUV.CARTER G.H	1 2 3 4 5 6 7 8 9 A B C D E F G H I J K L M N O	
21A		00037000600	ARAND.CONICA SEG D6 4.232004-0 RONDELLA STELLA INTERIORE.D6 D INNER STAR WASHER 0 6	SCHEIBE RONDELLE EVENTAIL D 6	1 2 3 4 5 6 7 8 9 A B C D E F G H I J K L M N O	

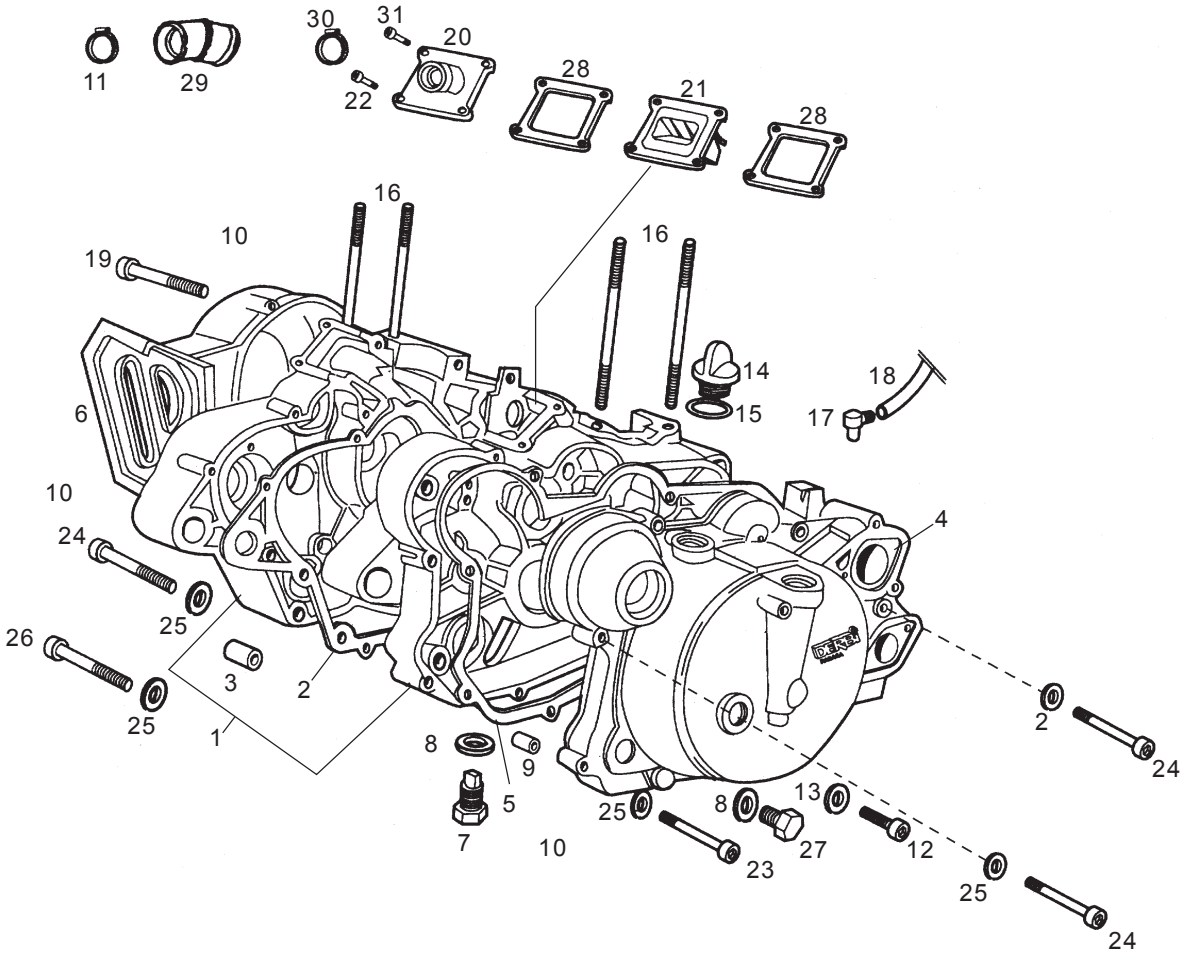

Fig.	Ver.	COD. KOD.	DESCRIPCIÓN DENOMINAZIONE NAME	BEZEICHNUNG DESIGNATION	MOD.	NOTAS NOTES NOTA MITSCHRIFT NOTES
01A		00H03003634	CTO.CARTER COMPLESSO CARTERS CRANKCASE ASSEMBLY	MOTORGEHAUSE ENSEMBLE DES CARTERS MOTEUR	1 2 3 4 5 6 7 8 9 A B C D E F G H I J K L M N O	
02A		00H03000031	JUNTA CARTERS.50CC. GUARNIZIONE CARTERS 50CC GASKET, CHANKCASE	GEHAUSEDICHTUNG JOINT DE CARTERS CENTRAUX	1 2 3 4 5 6 7 8 9 A B C D E F G H I J K L M N O	
03A		00H03010361	SEPARAD.SILENT.DT.CARTER SEPARATORE SILENTBLOCK ANTERIO BUSHING	FUHRUNGSBUCHSE GABELSCHENK ENTRETOISE	1 2 3 4 5 6 7 8 9 A B C D E F G H I J K L M N O	
04A		00H03002884	SCTO.TAPA CARTER DR. SUBC.COP.CARTER DES. CRANKCASE COVER	KUPPLINGSDECKEL CARTER D'EMBRAYAGE	1 2 3 4 5 6 7 8 9 A B C D E F G H I J K L M N O	
05A		00H03000141	JUNTA TAPA CARTER DR.74/80CC. GUARNIZIONE COPERCHIO CARTER D GASKET RIGHT-HAND COVER	DICHTUNG JOINT DE CARTER EMBRAYAGE	1 2 3 4 5 6 7 8 9 A B C D E F G H I J K L M N O	
06A		00H03000242	TAPA CARTER IZ. COPERCHIO CARTER SINISTRO 4-6V CRANCKASE COVER LEFT	GEHD US ED EDKELLINKS COUVERCLE CARTER GAUCHE	1 2 3 4 5 6 7 8 9 A B C D E F G H I J K L M N O	
07A		00A03001422	CTO.TOR.VACDO.ACTE. COMPLESSO VITE SVUOTAMENTO OL DRAIN PLUG W/MAGNET	OLABLASSSCHRAUBE BOUCHON DE VIDANGE	1 2 3 4 5 6 7 8 9 A B C D E F G H I J K L M N O	
08A		00A03000121	ARAND.VACDO.ACTE.VARIANT. RONDELLA SVUOTAMENTO OLIO VAR GASKET, DRAIN PLUG	SCHEIBE RONDELLE FIBRE D10-VIDANGE	1 2 3 4 5 6 7 8 9 A B C D E F G H I J K L M N O	
09A		00002030020	PASADOR UNION CARTER. CHIAVISTELLO UNIONE CARTER DOWEL PIN, CRANCKASE	BUCHSE PIED DE CENTRAGE	1 2 3 4 5 6 7 8 9 A B C D E F G H I J K L M N O	
10A		00H03000831	CENTRAD.TAPA CART.IZ.49/74/80 CENTRATORE COPERCHIO CARTER SI SPACER, CRANCKASE	ZENTRIERSTUCK CENTRAGE CARTER	1 2 3 4 5 6 7 8 9 A B C D E F G H I J K L M N O	
11A		00H02501491	BRIDA OTIKER GHIERA OTIKER COLLAR OTIKER	ZÜGEL OTIKER BRIDE OTIKER	1 2 3 4 5 6 7 8 9 A B C D E F G H I J K L M N O	

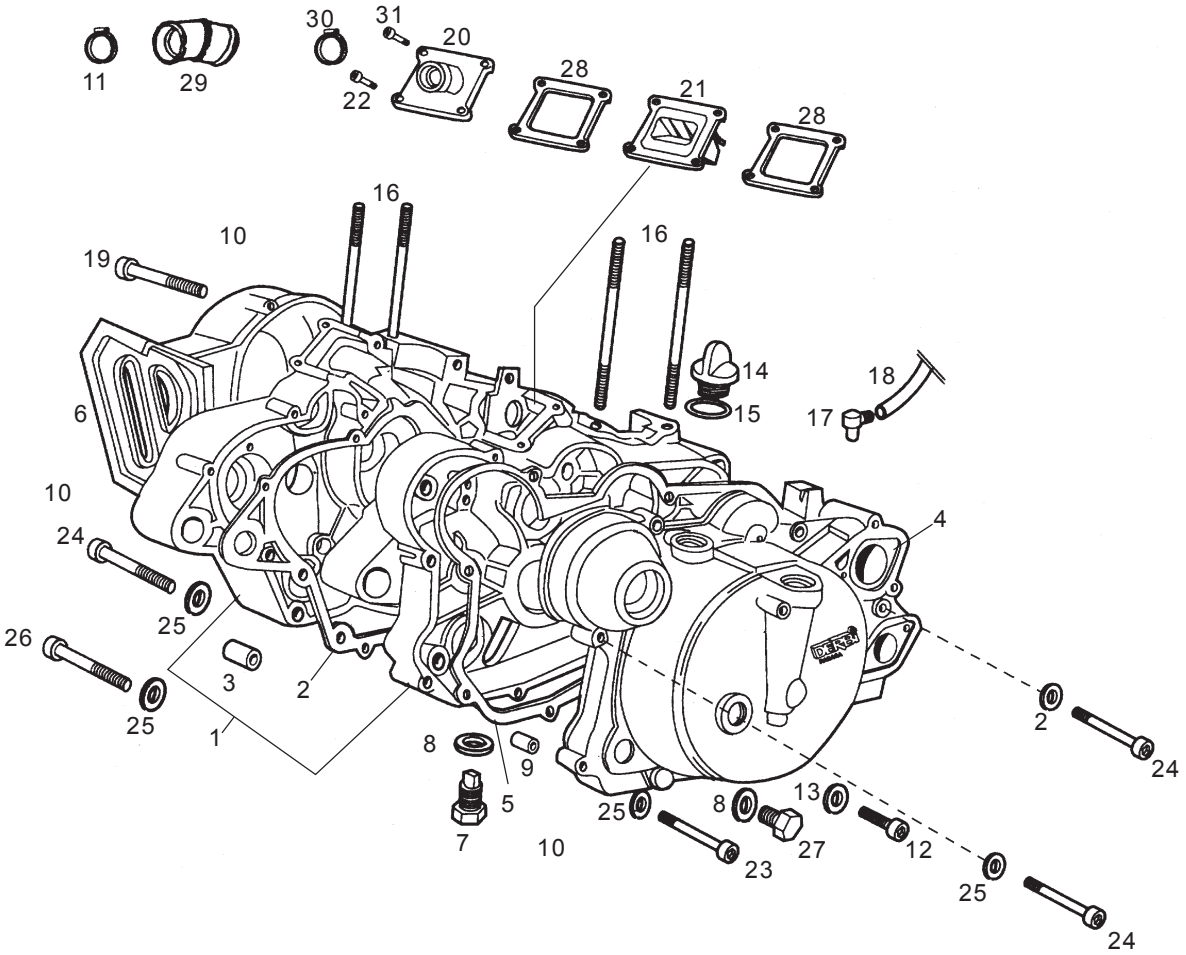

Fig.	Ver.	COD. KOD.	DESCRIPCIÓN DENOMINAZIONE NAME	BEZEICHNUNG DESIGNATION	MOD.	NOTAS NOTES NOTA MITSCHRIFT NOTES
12A		00002061011	TOR.C/ALLEN.6M100X10.DIN- VITE TESTA ALLEN 6M100X10 ALLEN SCREW M6X10	SCHRAUBE VIS A TETE CREUSE 6M100X10.	1 2 3 4 5 6 7 8 9 A B C D E F G H I J K L M N O	
13A		00003102280	ARAND.NIVEL ACEITE.D.6.ANTOR. RONDELLA LIVELLO OLIO D.6 TORC WASHER, SEALING	DICHTRING RONDELLE FIBRE D 6	1 2 3 4 5 6 7 8 9 A B C D E F G H I J K L M N O	
14A		00H03000081	TOR.LLENADO ACEITE 74/80CC VITE PIENO OLIO OIL FILLER SCREW	OLABFULLRING BOUCHON REMP.HUILE	1 2 3 4 5 6 7 8 9 A B C D E F G H I J K L M N O	
15A		00001130370	ANILLO TORICO TAPON NIV.ACTE. ANELLO TORICO TAPPO LIVELLO OL WASHER SEALING	O-RING JOINT DE JAUGE D,HUILE	1 2 3 4 5 6 7 8 9 A B C D E F G H I J K L M N O	
16A		00003130050	ESPARRG.FIJ.CILINDRO.ANTORCHA. BULLONE FISSAGGIO CILINDRO TOR STUD CYLINDER	STEHBOLZEN GOUJON DE FIXE CYLINDRE	1 2 3 4 5 6 7 8 9 A B C D E F G H I J K L M N O	
17A		00005530600	RACORD SALIDA GASES CART.4-6V. RACCORDI USCITA GAS CARTER . CRANKCASE VENT RACCORD	AUSGANGSSTUTZEN RACCORD DE SORTIE GAZ CARTE	1 2 3 4 5 6 7 8 9 A B C D E F G H I J K L M N O	
18A		00H03700461	TUBO RESPIR.DPTO.ACTE.GPR/75. TUBO RESPIRAZIONE SERBATOIO O VENT PIPE OIL TANK	ENTLUEFTUNGSSCHLAUCH TUYAU RESPIRATION RESERVOIR	1 2 3 4 5 6 7 8 9 A B C D E F G H I J K L M N O	
19A		00G03900821	TOR.C/ALLEN.6M100X30. VITE TESTA ALLEN 6M100X30.DIN- HEX.SOCKET-HEAD SCREW 6MX30	INBUSSCHRAUBE VIS T. CREUSE	1 2 3 4 5 6 7 8 9 A B C D E F G H I J K L M N O	
20A		00H02507061	BOQUILLA CARBURADOR COMPLESSO ATTACCO CARBURATORE INTAKE MANIFOLD,	ANSAUGSTUTZEN ENSEMB.PIPE D'ADMISSION	1 2 3 4 5 6 7 8 9 A B C D E F G H I J K L M N O	
21A		00H02510641	CTO.CAJA LAM.ADM.74/80CC.2598- COMPLESSO CASSA LAMINA AMMISSI INLET BOX	MEMBRANE BOITE A CLAPETS	1 2 3 4 5 6 7 8 9 A B C D E F G H I J K L M N O	
22A		00G03000211	TOR.C/ALLEN.6M100X25. VITE TESTA ALLEN 6M100X25. HEX.SOCKET-HEAD SCREW 6MX25	INBUSSCHRAUBE 6M100X25. VIS A TETE ALLEN 6M100X25.	1 2 3 4 5 6 7 8 9 A B C D E F G H I J K L M N O	

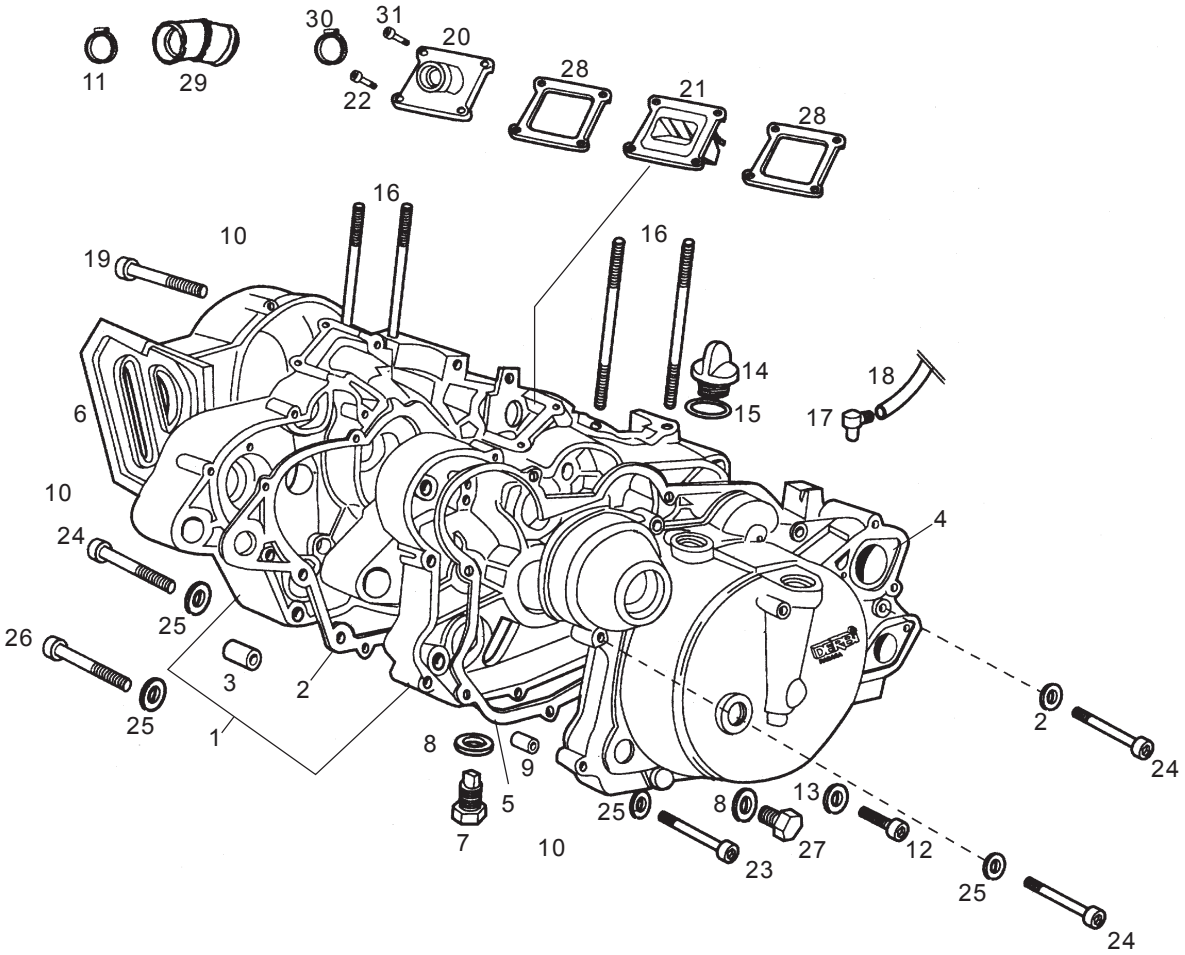

Fig.	Ver.	COD. KOD.	DESCRIPCIÓN DENOMINAZIONE NAME	BEZEICHNUNG DESIGNATION	MOD.	NOTAS NOTES NOTA MITSCHRIFT NOTES
23A		00G03001091	TOR.C/ALLEN.6M100X35.D-912/8.8 VITE TESTA ALLEN 6M100X35 ALLEN SCREW 6M100X3	BEF.-SCHRAUBE MOTORHEHÉUSE BOULON SERRAGE CARTERS (6X3	1 2 3 4 5 6 7 8 9 A B C D E F G H I J K L M N O	
24A		00G03002091	TOR.C/ALLEN.6M100X40.D-912.8.8 VITE TESTA ALLEN 6M100X40.DIN- HEX.SOCKET-HEAD 6MX40	INBUSSCHRAUBE 6M100X40 VIS 6M100X40.	1 2 3 4 5 6 7 8 9 A B C D E F G H I J K L M N O	
25A		00000031060	ARAND.PLANA MECANIZ.D.6.DIN125 RONDELLA PIATTA D6 MACHINED FLAT WASHER D6 DIN-12	SCHEIBE D.6 ROND. PLATE MECANISEE D6DIN	1 2 3 4 5 6 7 8 9 A B C D E F G H I J K L M N O	
26A		00H03000091	TOR.C/ALLEN.6M100X50.D-912.8.8 VITE TESTA ALLEN 6M100X50.D-9 HEX.SOCK-HEAD SCR.6M100X50D912	SCHRAUBE 6X50 VIS 6X50	1 2 3 4 5 6 7 8 9 A B C D E F G H I J K L M N O	
27A		00A03000132	TOR.VACIADO ACEITE. VITE SVUOTAMENTO OLIO PLUG, DRAIN	SCHRAUBE BOUCHON DE VIDANGE	1 2 3 4 5 6 7 8 9 A B C D E F G H I J K L M N O	
28A		00H02500811	JUNTA SOPTE.VALVULA ADMIS.74CC GUARNIZIONE SOSTEGNO VALVOLA A INLET VALVE GASKET	DICHTUNG VENTILHALTER JOINT BTE.CLAPETS	1 2 3 4 5 6 7 8 9 A B C D E F G H I J K L M N O	
29A		00H02502891	CASQ.UNION BOQ.CARB. GHIERA UNIONE ROC.CARB. COMPLING SLEEVE INTAKE	ANSAUGGUMMI CONDUIT ADMISION	1 2 3 4 5 6 7 8 9 A B C D E F G H I J K L M N O	
30A		00H02500491	BRIDA OTIKER GHIERA OTIKER COLLAR OTIKER	ZÜGEL OTIKER BRIDE OTIKER	1 2 3 4 5 6 7 8 9 A B C D E F G H I J K L M N O	
31A		00F05000061	TORNILLO VITE SCREW	SCHRAUBE VIS	1 2 3 4 5 6 7 8 9 A B C D E F G H I J K L M N O	

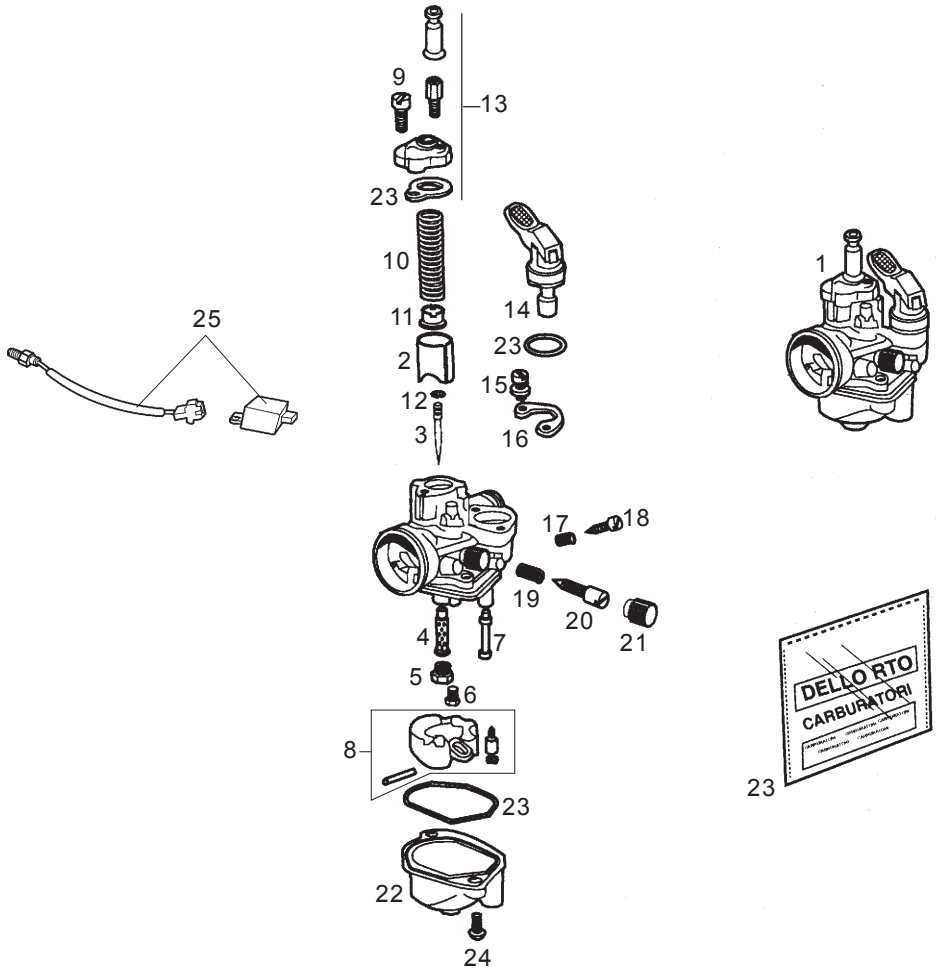

Fig.	Ver.	COD. KOD.	DESCRIPCIÓN DENOMINAZIONE NAME	BEZEICHNUNG DESIGNATION	MOD.	NOTAS NOTES NOTA MITSCHRIFT NOTES
01A		00H03239011	CTO.CARBURADOR COMPLESSO CARBURATORE CARBURETOR	VERGASER KOMPL ENSEMBLE CARBURATEUR	1 2 3 4 5 6 7 8 9 A B C	
01B		00H03245011	CTO.CARBURADOR COMPLESSO CARBURATORE CARBURETOR	VERGASER KOMPL ENSEMBLE CARBURATEUR	D E F G H I J K L M N O	
02A		00F03201211	R-COMPUERTA GAS R-VALVOLA GAS SLIDE	GASSCHIEBER BOISSEAU	1 2 3 4 5 6 7 8 9 A B C D E F G H I J K L M N O	
03A		00G03201431	AGUJA PULVERIZAD. A8 3 R-SPILLO SPRUZZATORE NEEDLE	DUESENNADELUSE AIGUILLE PULVERIZ.	1 2 3 4 5 6 7 8 9 A B C D E F G H I J K L M N O	
04A		00H03204421	R-PULVERIZADOR GA210 POLVERIZZATORE GA210 NEEDLE JET GA210	ZERSTAUBERDUSE GA210 PULVERISATEUR GA210	1 2 3 4 5 6 7 8 9 A B C D E F G H I J K L M N O	
05A		00G03206031	R-SURTIDOR MAX.73 R-GETTO MASSIMO 73 MAIN JET 73	HAUPT DUSE 73 GICLEUR PRINCIPAL 73	1 2 3 4 5 6 7 8 9 A B C	
05B		00G03208031	R-SURTIDOR MAX.55 R-GETTO MASSIMO 55 MAIN JET 55	HAUPT DUSE 55 GICLEUR PRINCIPAL 55	D E F G H I J K L M N O	
06A		00H04106181	R-SURTIDOR MIN.D.36 R-GETTO MINIMO 36 JET MIN D. 36	DUESE MIN. D.36 R-GICLEUR MINIMUM. D.36	1 2 3 4 5 6 7 8 9 A B C D E F G H I J K L M N O	
07A		00H03203481	R-SURTIDOR ENTR. AIRE R-GETTO INGRESSO ARIA IDLE JET	LUFTEINLASS-DUSE R-GICLEUR D'ENTRE D'AIR	1 2 3 4 5 6 7 8 9 A B C D E F G H I J K L M N O	
08A		00H03202281	R-CTO.AGUJA FLOTAD.VAM.AU.40KH R-COMPLESSO SPILLO GALLEGGIAN FLOAT NEEDLE ASSY	SCHWIMMERNADEL VAM.AU.40KH R-EN.POINT.DIARRIVEE VAM.AU	1 2 3 4 5 6 7 8 9 A B C D E F G H I J K L M N O	
09A		00G03200061	R-TOR.FIJ.TAPA CAM. MEZCLA VM.AUS. R-VITE FISSAGIO COPERCHIO CAM. MIXING XAMBER COVER SEGURING	BEF.-SCHRAUBE DECKEL MISCH R-BOUL.SER.COUV.CHAMBRE MEL	1 2 3 4 5 6 7 8 9 A B C D E F G H I J K L M N O	

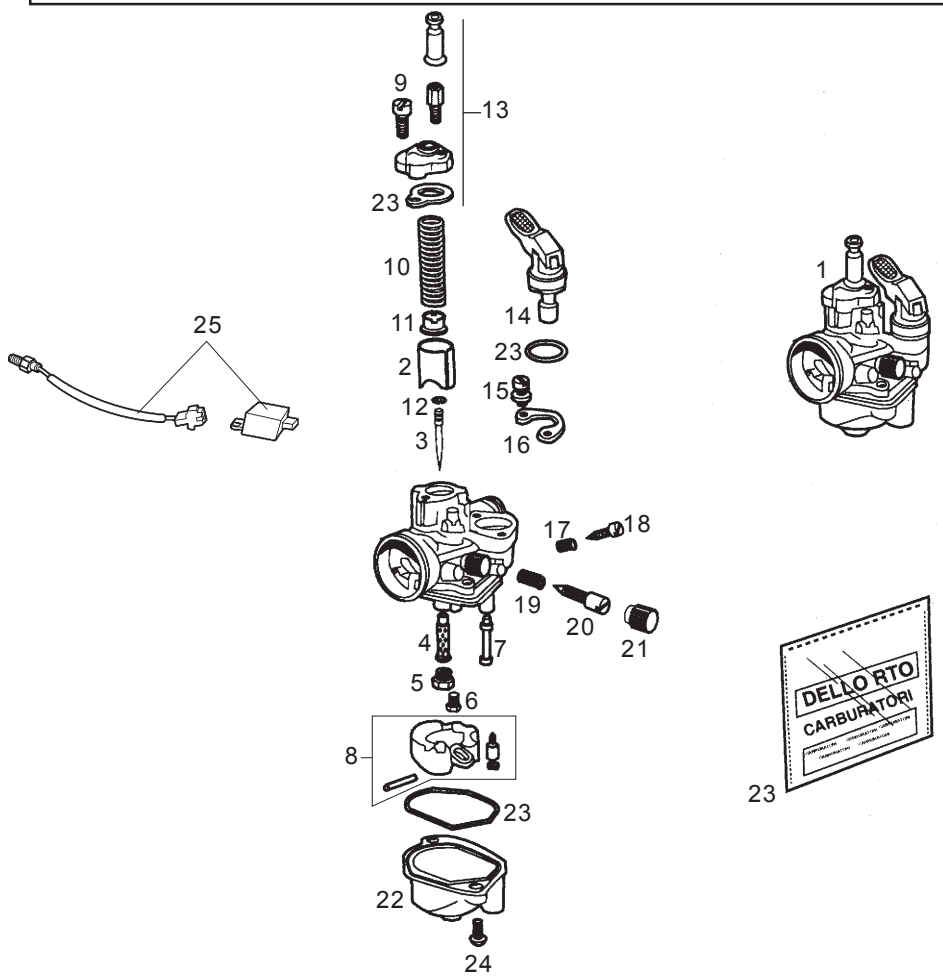

Fig.	Ver.	COD. KOD.	DESCRIPCIÓN DENOMINAZIONE NAME	BEZEICHNUNG DESIGNATION	MOD.	NOTAS NOTES NOTA MITSCHRIFT NOTES
10A		00G03201071	R-MUELLE VALV.GAS VAM.AUS.40KH R-MOLLA VALVOLA GAS VAMOS AV THROOTLE VALVE RETURN	FEDER FUR GASVENTIL R-RESSORT VALVE ESS.VAM.AU.	1 2 3 4 5 6 7 8 9 A B C D E F G H I J K L M N O	
11A		00G03200511	R-CASC.AGUJA PULV.VAM.AU.40 R-GHIERA SPILLO SPRUZZATORE NEEDLE BUSHING	BUCHSE DUESENNADEL VA.AU.4 R-DOUILLE AIGUI.PULVERZ.VA.	1 2 3 4 5 6 7 8 9 A B C D E F G H I J K L M N O	
12A		00G03201371	R-PINZA AGUJA PULVER.VAM.AV.40 R-MORSA SPILLO SPRUZZATORE NEEDLE CIRCLIP	KLAMMER DUESENNADEL VAM.AU R-PINCE AIGUI.PULVERZ.VAM.A	1 2 3 4 5 6 7 8 9 A B C D E F G H I J K L M N O	
13A		00H03202231	R-TAPA CAMARA MEZCLA R-COPERCHIO CAMARA MISCELA COVER CARBURETOR TOP	MISCHRAUMDECKEL COUVERCLE CARBURATEUR	1 2 3 4 5 6 7 8 9 A B C D E F G H I J K L M N O	
14A		00H03203711	R-CTO.STARTER R-COMPLESSO STARTER CHOCKE LOCK	STARTERVENTIL VANNE DU STARTER MANUEL	1 2 3 4 5 6 7 8 9 A B C D E F G H I J K L M N O	
15A		00G03200541	R-TOR.FIJ.START.AUTOM.VM.AV.40 R-VITE FISSAGIO STARTER AV. AUTOMA.CHOCKE SEGURING SCREE	BEF.-SCHRAUBEAUTOM STARTER R-BOULON SER.START.AUTOM.VM	1 2 3 4 5 6 7 8 9 A B C D E F G H I J K L M N O	
16A		00G03200551	R-PRCTO.FIJ.STAR.AUT.V.AV.40 R-PLOMBAGE FIX.START.AUT.V.AV. AUTOMA.CHOCKE SEGURING SCREE	HALTERUNG AUTOM. STARTER A R-PLOMBAGE FIX.START.AUT.V.	1 2 3 4 5 6 7 8 9 A B C D E F G H I J K L M N O	
17A		00G03200721	R-MUELLE REG.AIRE MIN.VM.AV.40 R-RESSORT REG.AIR.MIN.VM.AV 40 IDLE ADJUSTER	FEDER LUFTREGLER MIN. VM. R-RESSORT REG.AIR MIN.VM.AU	1 2 3 4 5 6 7 8 9 A B C D E F G H I J K L M N O	
18A		00G03200731	R-TOR.REG.AIRE MIN. R-VIS REG.AIR.MIN.VAM.AV.40KH. IDLE ADJUSTER SCREW	LUFT-REGULIERSCHRAUBE MIN. R-VIS REG.AIR MIN.VAM.AU.40	1 2 3 4 5 6 7 8 9 A B C D E F G H I J K L M N O	
19A		00G03200101	R-MUELLE REG.VALV.GAS VM.AV 40 R-RES.REG.VALVE ESS.VM.AV.40 THROOTLE VALVE ADJUSTE SPRING	FEDER GAS-VENTIL-REGELUNG R-RES.REG.VALVE ESS.VM.AU.4	1 2 3 4 5 6 7 8 9 A B C D E F G H I J K L M N O	
20A		00G04100131	R-TOR.REG.VALV.GAS VAM.AV.40 KH R-BOUTON VITE REGOLAZIONE VALVOLA THROOTLE VALVE ADJUSTER SCREW	SCHRAUBE GAS-VENTIL-REGELU R-VIS REG.VALV.ESS.VAM.AU.4	1 2 3 4 5 6 7 8 9 A B C D E F G H I J K L M N O	

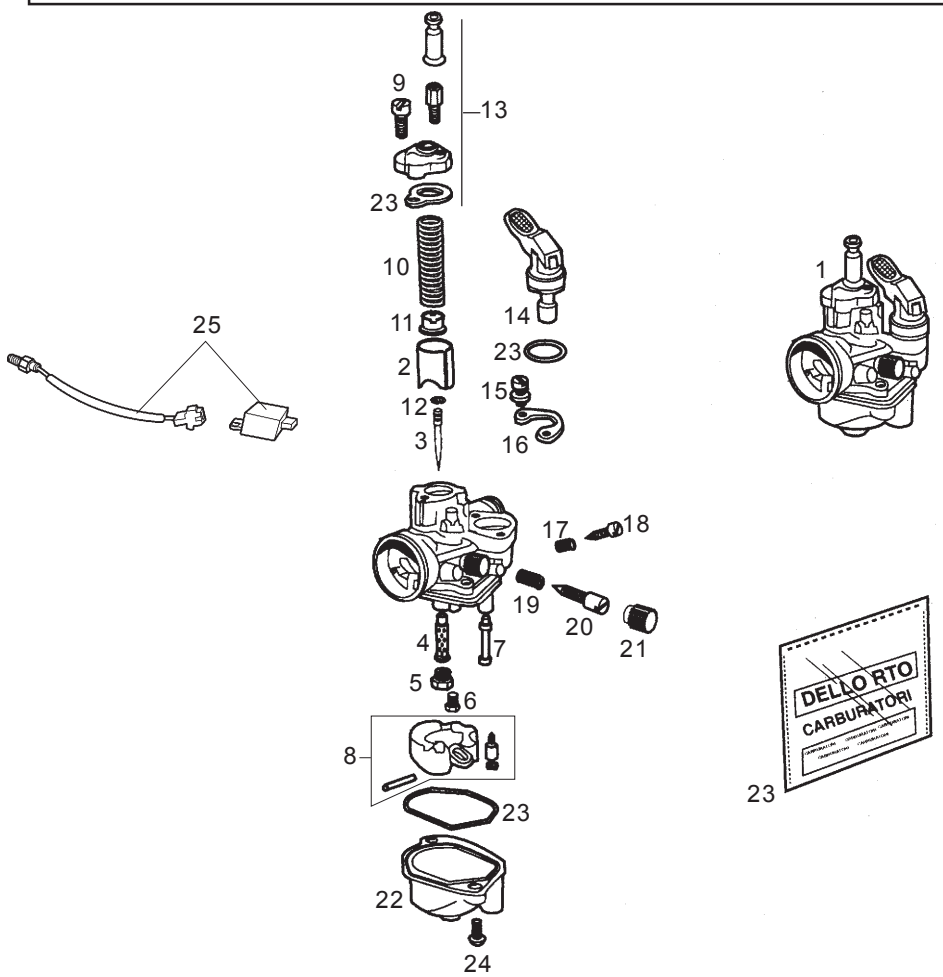

Fig.	Ver.	COD. KOD.	DESCRIPCIÓN DENOMINAZIONE NAME	BEZEICHNUNG DESIGNATION	MOD.	NOTAS NOTES NOTA MITSCHRIFT NOTES
21A		00G04100741	R-BOTON.TOR.REG.VAL.GAS V.AV. R-BOUTON AVIS REGL.VALV.ESS.V.A. THROOTLE VALVE ADJUSTER SCREW	KNOPF GASVENTIL-STELLSCHRA R-BOUTON VIS REGL.VALV.ESS.V.A	1 2 3 4 5 6 7 8 9 A B C D E F G H I J K L M N O	
22A		00H03201201	R-VASO GASOLINA R-VASCHETTA BENZZINA FLOAT BOWL SEET	SCHWIMMERKAMMER CUVE INFERIEURE CARBUR.	1 2 3 4 5 6 7 8 9 A B C D E F G H I J K L M N O	
23A		00G04100771	R-CTO.JUNTAS CARBU.V.25K/H.AL. R-COMPLESSO GUARNIZIONE CARBU. CARBURETOR GASKET	DICHTUNGSATZ KOMPL. VERGAS R-ENS. JOINTS CARBUR. V.25K	1 2 3 4 5 6 7 8 9 A B C D E F G H I J K L M N O	
24A		00G03201091	R-TOR.FIJ.VASO GASOL.VA.AV.40K R-VITE FISSAGIO VASCHETTA BE FLOAT CHAMBER SEGURING SCREW	BEF.-SCHRAUBE R-BOUL.SERG.VASE ESSENC.VA.	1 2 3 4 5 6 7 8 9 A B C D E F G H I J K L M N O	
25A		00H06001151	CTO. CALENTADOR COMPLESSO KIT RISCALDAMENTO KIT CARBURETTOR HEATER	KABELBAUN FUR HEIZUNG VERG KIT QUI CHAUFFE CARBURATEUR	9 A B C L M N O	

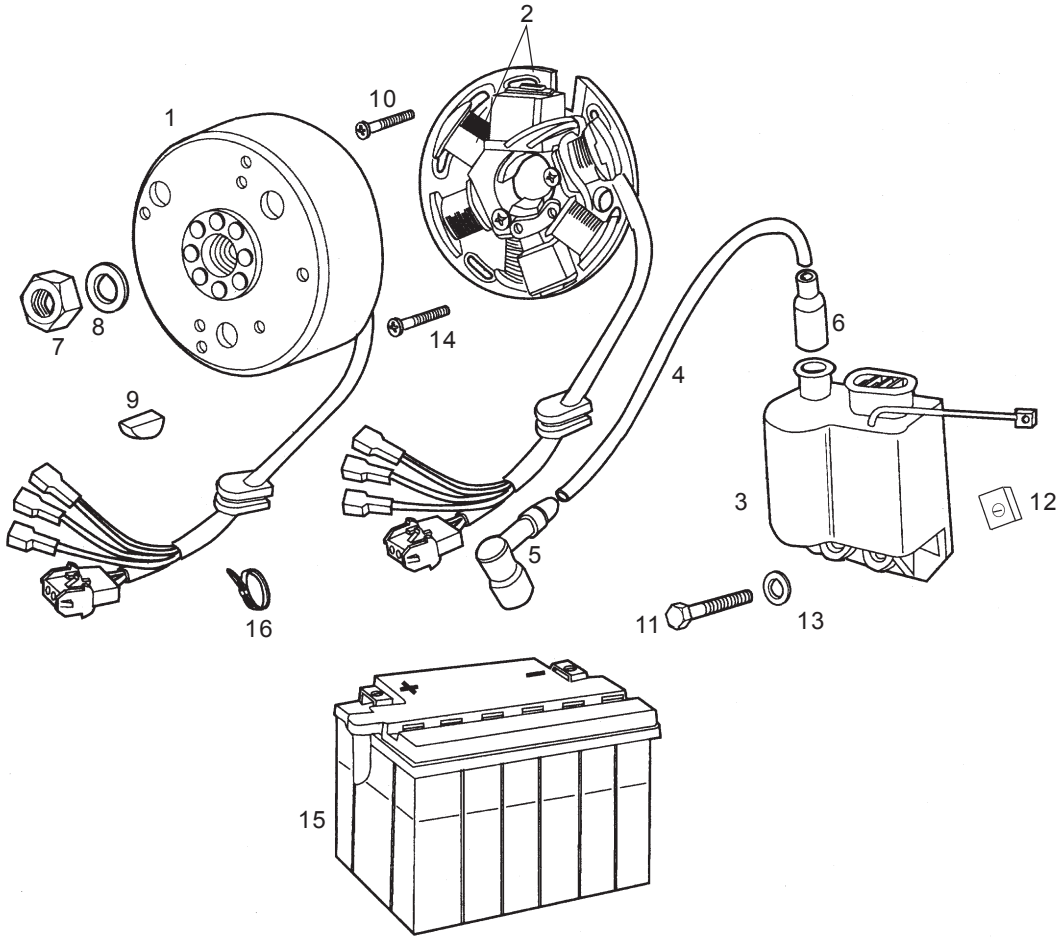

Fig.	Ver.	COD. KOD.	DESCRIPCIÓN DENOMINAZIONE NAME	BEZEICHNUNG DESIGNATION	MOD.	NOTAS NOTES NOTA MITSCHRIFT NOTES
01A		00H03307011	CTO VOLANTE ELECTRO. (LEONELLI) VOLANO ELETTRONICO (LEONELLI) MAGNETO ASSEMBLY (LEONELLI)	LICHTMASCHINE KOMPL. (LEONELLI) VOLANT MAGNETIQUE (LEONELLI)	1 2 3 4 5 6 7 8 9 A B C D E F G H I J K L M N O	
01B		00H03301011	CTO VOLANTE ELECTRONICO (DUCATI) VOLANO ELETTRONICO (DUCATI) MAGNETO ASSEMBLY (DUCATI)	LICHTMASCHINE KOMPL. (DUCATI) VOLANT MAGNETIQUE (DUCATI)	1 2 3 4 5 6 7 8 9 A B C D E F G H I J K L M N O	
02A		00H03303701	R-CTO STATOR VOL.ELEC.(LEONELLI) STATORE VOLANO ELE (LEONELLI) STATOR PLATE (LEONELLI)	STATOR (LEONELLI) STATOR (LEONELLI)	1 2 3 4 5 6 7 8 9 A B C D E F G H I J K L M N O	
02B		00H03300701	R-CTO STATOR VOL.ELEC.(DUCATI) STATORE VOLANO ELE (DUCATI) STATOR PLATE (DUCATI)	STATOR (DUCATI) STATOR (DUCATI)	1 2 3 4 5 6 7 8 9 A B C D E F G H I J K L M N O	
03A		00H03331171	CTO CONVERSOR ELECTR. (LEONELLI) COVERTITORE ELETTRON (LEONELLI) COIL, PRIMARY IGNITION (LEONELLI)	ZUNDSPULE (LEONELLI) BOBINE AUTE TENSION (LEONELLI)	1 2 3 4 5 6 7 8 9 A B C D E F G H I J K L M N O	
03B		00H03330171	CTO CONVERSOR ELECTR. (DUCATI) COVERTITORE ELETTRON (DUCATI) COIL, PRIMARY IGNITION (DUCATI)	ZUNDSPULE (DUCATI) BOBINE AUTE TENSION (DUCATI)	1 2 3 4 5 6 7 8 9 A B C D E F G H I J K L M N O	
04A		00F03310741	CABLE BOBINA.START.A.E. CAVO BOBINA START.A.E. CABLE COIL PRIMARY IGNITION	ZUNDSPULENKABEL CABLE	1 2 3 4 5 6 7 8 9 A B C D E F G H I J K L M N O	
05A		00G03301271	CTO. PIPA BUJIA (MTA.) PIPETA CANDELA COVER, SPARK PLUG	ZUNDKERZENSTECRER PIPE DE BOUGIE	1 2 3 4 5 6 7 8 9 A B C D E F G H I J K L M N O	
06A		00F03300731	CAPUCHON CABLE BOBINA SCO-50. CAPPUCCIO CAVO BOBINA SCO-50. COIL CABLE RUBBER PROTECTOR	KAPPE CAPUCHON	1 2 3 4 5 6 7 8 9 A B C D E F G H I J K L M N O	
07A		00H03300221	TCA.FIJ.VOLTE.MAGN.74/80CC. DADO FISSAGGIO VOLANO MAGNETIC NUT,MAGNETO ASSEMBLY	MUTTER ECROU FIXE VOLANT	1 2 3 4 5 6 7 8 9 A B C D E F G H I J K L M N O	
08A		00F03300241	ARAND.FIJ.VOLTE.MAGN.SCO.DCT. RONDELLA FISSAGGIO VOLANO MAG WASHER, FLYWHEEL 10MM	BEF.-SCHEIBE RONDELLE	1 2 3 4 5 6 7 8 9 A B C D E F G H I J K L M N O	

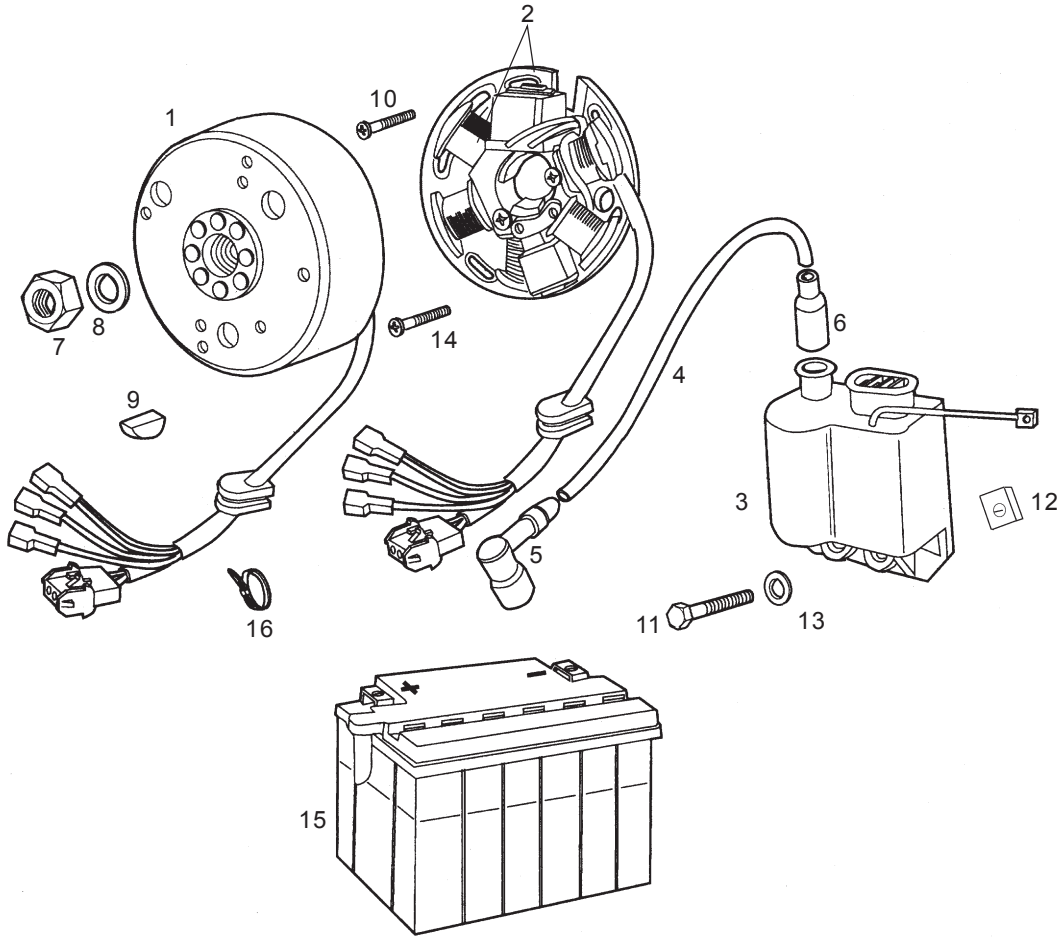

Fig.	Ver.	COD. KOD.	DESCRIPCIÓN DENOMINAZIONE NAME	BEZEICHNUNG DESIGNATION	MOD.	NOTAS NOTES NOTA MITSCHRIFT NOTES
09A		00003133230	CHAVETA VOLTE.MAGN.P.REC.MCH. SPINA VOLANO MAGNETICO .P.REC. KEY, FLYWHEEL	KEIL CLAVETTE VOLANT MAGNETIQUE	1 2 3 4 5 6 7 8 9 A B C D E F G H I J K L M N O	
10A		00003133260	TOR.FIJ.VOLTE.MAGN.5M80X10. VITE FISSAGGIO VOLANO MAGNETIC SCREW, STATOR PLATE	SCHRAUBE VIS FIX VOLANT	1 2 3 4 5 6 7 8 9 A B C D E F G H I J K L M N O	
11A		00012162000	TOR.C/EXAG. 5M80X16.DIN-933 VITE TESTA ESAGONALE 5M80X16 D HEX.HEAD SCREW 5M80X15	SCHRAUBE BOULON TETE HEX.5M80X15	1 2 3 4 5 6 7 8 9 A B C D E F G H I J K L M N O	
12A		00D01501371	TCA. FIJ.CUBRECAD.212827 DADO FISSAGGIO NUT	MUTTER ECROU	1 2 3 4 5 6 7 8 9 A B C D E F G H I J K L M N O	
13A		00D01200171	ARAND.PLANA MEC.D.5.DIN125-B RONDELLA PIATTA D5 MACHINED FLAT WASHER D5	SCHEIBE D.5 DIN-125 ROND.PLATE MECANISEE D.5.DI	1 2 3 4 5 6 7 8 9 A B C D E F G H I J K L M N O	
14A		00000012420	TOR.C/RED.CRUZ 4M70X20 D7985NG VITE TESTA TONDA CROCE 4M70X20 ROUNDHEAD PHILIPS SCREW 4MM-7	SCHRAUBE VIS T.RON.CROIX 4M70X20 D79	1 2 3 4 5 6 7 8 9 A B C D E F G H I J K L M N O	
15A		00G03301401	BATERIA 12V. 4AH. BATTERIA 12V BATTERY 12V. 4AH.	BATTERIE.12V. BATTERIE.12V. 4AH. START.A.	1 2 3 4 5 6 7 8 9 A B C D E F G H I J K L M N O	
16A		00F00900531	BRIDA UNECABLES NEGRA FLANGIA UNIONE CAVI BLACK CABLE TIE	KABELBINDER COLLIER	1 2 3 4 5 6 7 8 9 A B C D E F G H I J K L M N O	

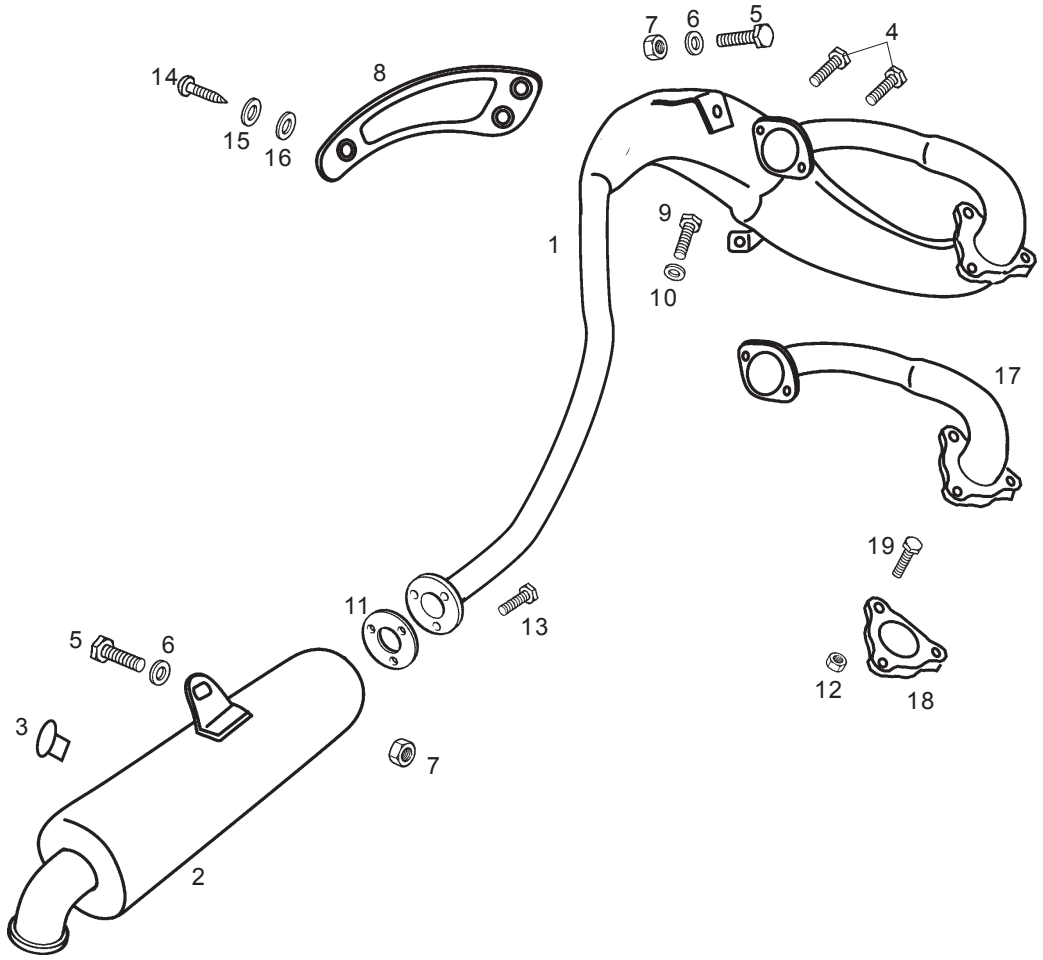

Fig.	Ver.	COD. KOD.	DESCRIPCIÓN DENOMINAZIONE NAME	BEZEICHNUNG DESIGNATION	MOD.	NOTAS NOTES NOTA MITSCHRIFT NOTES
01A		00H03426082	SCTO.TUBO ESC-SIL. SUBCOMP.TUBO SCAPP-SIL. EXHAUST PIPE AND MUFFLER	AUSPUFF ENSEMBLE TUBE DIECHAPPEMENT	1 2 3 4 5 6 7 8 9 A B C	
01B		00H03442081	TUBO ESCAP SD-R X-TREM E1R SUBCOMP.TUBO SCAPP-SIL. EXHAUST PIPE AND MUFFLER	AUSPUFF ENSEMBLE TUBE DIECHAPPEMENT	D E F G H I J K L M N O	
02A		00H03423411	SCTO.SORDINA SUBCOMP.SORD. EXHAUST TANK	SCHALLDAMPFER SILENCIEUX DIECHAPPEMENT	1 2 3 4 5 6 7 8 9 A B C D E F G H I J K L M N O	
03A		00G01500951	TOPE GOMA APPOGIO ZAMPA CAVALLETO SIDE STAND REST	GUMMISTOPEL APPUI BEQUILLE LATERALE	1 2 3 4 5 6 7 8 9 A B C D E F G H I J K L M N O	
04A		00002062011	TOR.C/ALLEN.6M100X20.D-912/8.8 VITE TESTA ALLEN 6M100X20.D-91 ALLEN SCREW M6X20	INBUSSCHRAUBE 6M100X20. VIS T.CREUSE 6M100X20.D-912	1 2 3 4 5 6 7 8 9 A B C D E F G H I J K L M N O	
05A		00000002816	TOR C/EXAG 8M125X16 VITE TESTA ESAGONALE 8M125X16 SCREW M8X16	SCHRAUBE 8M125X16 8M125X16 VISA TETE HEXAG.8M125X16	1 2 3 4 5 6 7 8 9 A B C D E F G H I J K L M N O	
06A		00000031080	ARANDELA PLANA D8 RONDELLA PIATTA D8 MACHINED FLAT WASHER D8 DIN-12	SCHEIBE ROND. PLATE MECANISEE	1 2 3 4 5 6 7 8 9 A B C D E F G H I J K L M N O	
07A		00023208000	TCA.AUTOBLOC. 8M125 DADO AUTOBLOCCANTE 8M125 SELF-LOCKING NUT M8	MUTTER SELBSTS ECROU INDESSERABLE 8M125.DI	1 2 3 4 5 6 7 8 9 A B C D E F G H I J K L M N O	
08A		00H01800401	PROTECTOR SILENCIADOR PROTEZIONE SILENZIATORE SILENCER SHIELD	SCHALLDAEMPFERSCHUTZ PROTECT.SIL.	1 2 3 4 5 6 7 8 9 A B C D E F G H I J K L M N O	
09A		00004061600	TORNILLO VITE FISSAGGIO SCREW	SCHRAUBE VIS	1 2 3 4 5 6 7 8 9 A B C D E F G H I J K L M N O	
10A		00000033060	ARANDELA PLANA RONDELLA PIATTA D6 MACINED FLAT WASHER D6 DIN	SCHEIBE D.6 ROND.PLATE MECANISEE D6DIN	1 2 3 4 5 6 7 8 9 A B C D E F G H I J K L M N O	

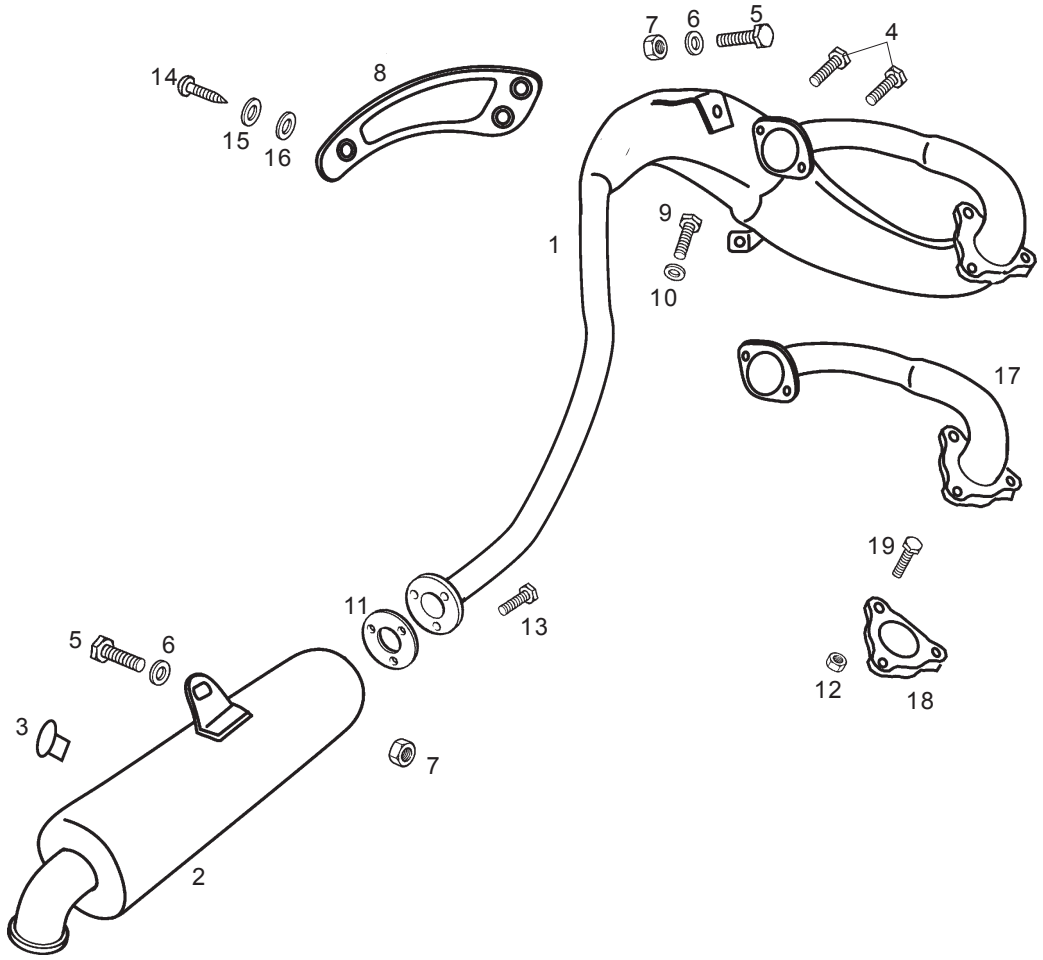

Fig.	Ver.	COD. KOD.	DESCRIPCIÓN DENOMINAZIONE NAME	BEZEICHNUNG DESIGNATION	MOD.	NOTAS NOTES NOTA MITSCHRIFT NOTES
11A		00H03404321	RACORD MUFFE RACCORD	MANICOTTO INGRESO GAS SORDIN HOSE, MUFFLER CONNECTING	1 2 3 4 5 6 7 8 9 A B C D E F G H I J K L M N O	
12A		00026006001	TUERCA DADO NUT	MUTTER ECROU	1 2 3 4 5 6 7 8 9 A B C D E F G H I J K L M N O	
13A		00D05910081	TORNILLO 6M100X16 VITE FISSAGGIO SCREW	SCHRAUBE VIS	1 2 3 4 5 6 7 8 9 A B C D E F G H I J K L M N O	
14A		00000012415	TORNILLO VITE FISSAGGIO SCREW	SCHRAUBE VIS	1 2 3 4 5 6 7 8 9 A B C D E F G H I J K L M N O	
15A		00F04201361	REMACHE RIBADITURA RIVET	RIVET RIVET	1 2 3 4 5 6 7 8 9 A B C D E F G H I J K L M N O	
16A		00D02600631	ARANDELA RONDELLA FERMO MOLLA FRIZIONE CLUTCH SPRING STOP WASHER	SCHEIBE ROND.BUTEE RESSORT EMBRAYA.	1 2 3 4 5 6 7 8 9 A B C D E F G H I J K L M N O	
17A		00H03433011	TUBO ESCAPE TUBO SCAPP-SIL. EXHAUST PIPE AND MUFFLER	AUSPUFF ENSEMBLE TUBE DIECHAPPEMENT	1 2 3 4 5 6 7 8 9 A B C D E F G H I J K L M N O	
18A		00G03400321	JUNTA GUARNIZIONE FISSAGGIO MARMITTA SILENCER SECURING GASKET	BEF.-DICHTUNG SCHALLDAEMPFER JOINT FIX.SILENCIEUX DIECHAP.	1 2 3 4 5 6 7 8 9 A B C D E F G H I J K L M N O	
19A		00G05001061	TORNILLO VITE ATTACCO CARBURATORE INLET MANIFOLD SECURING SCREW	BEF.-SCHRAUBE VERGASER-ANSAUGS BOUL.SERRAGE BUSE CARBUR.H	1 2 3 4 5 6 7 8 9 A B C D E F G H I J K L M N O	

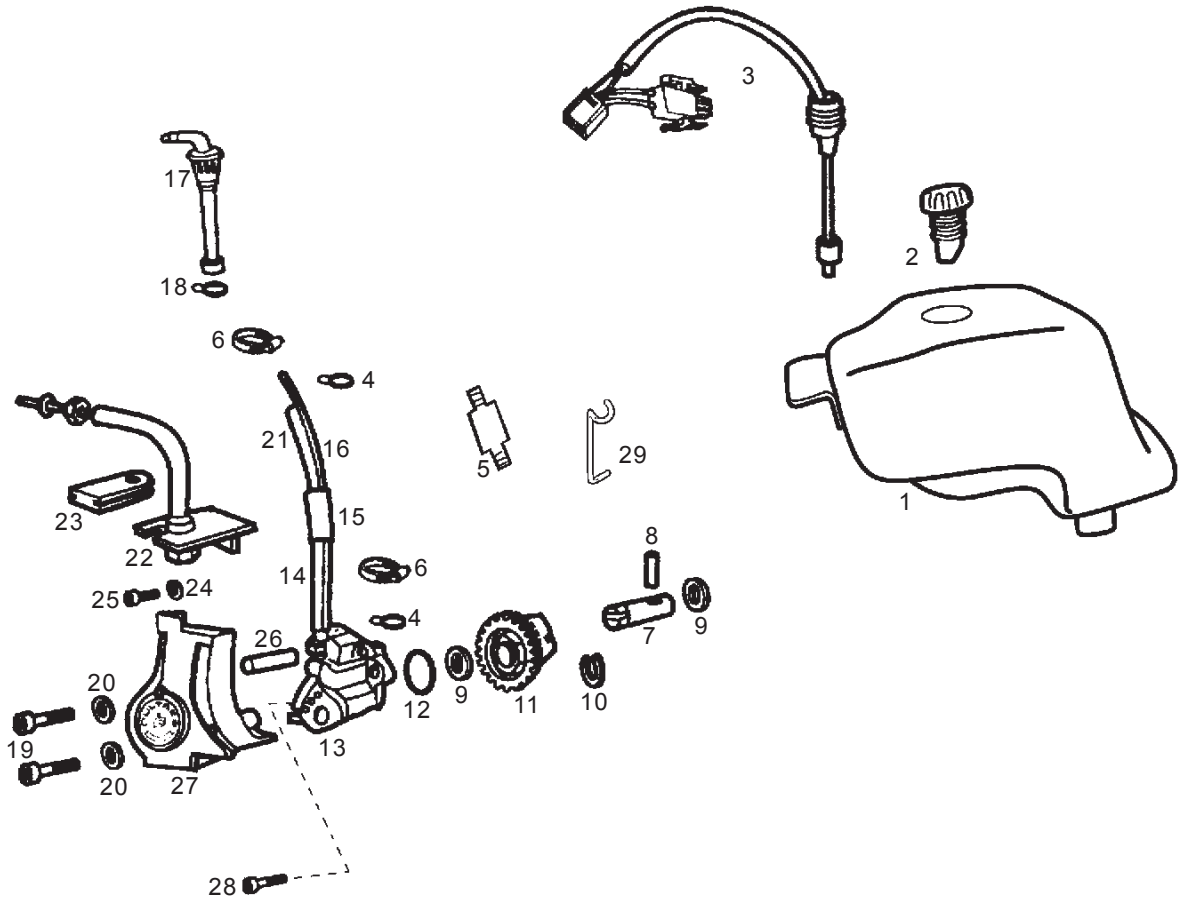

Fig.	Ver.	COD. KOD.	DESCRIPCIÓN DENOMINAZIONE NAME	BEZEICHNUNG DESIGNATION	MOD.	NOTAS NOTES NOTA MITSCHRIFT NOTES
01A		00H03704081	SCTO.DEPOSITO ACEITE. SUBCOMPLESSO SERBATOIO OLIO SE OIL, TANK	OILTANK RESERVOIR D,HUILE	1 2 3 4 5 6 7 8 9 A B C D E F G H I J K L M N O	
02A		00F03710241	CTO.TAPON DEPTO.ACTE.SCO/90. TAPPO SERBATOIO OLIO OIL RESERVOIR FILLER PLUG ASSY	STOPFEN OELTANK ENS. BOUCHON RESERV.HUILE S	1 2 3 4 5 6 7 8 9 A B C D E F G H I J K L M N O	
03A		00H03703051	CTO. INDICAD. NIVEL ACEITE TAPPO SERBATOIO OLIO OIL RESERVOIR FILLER PLUG ASSY	OLSTANDSGEBER NIVEAU DÔHUILE	1 2 3 4 5 6 7 8 9 A B C D E F G H I J K L M N O	
04A		00H00400501	ABRAZ.ELAST.TUBO GAS. FASCETTA ELASTICA TUBO BENZINA FUEL PIPE ELASTIC CLAMP	ELAST.KLAMMER GASLEITUNG CRAMPON ELASTIQUE TUBE ESSE	1 2 3 4 5 6 7 8 9 A B C D E F G H I J K L M N O	
05A		00G03701031	RACOR UNION TUBOS ACEITE RACCORDO UNIONE BREATHER	BREATHER RACCORD ENTREE D'HUILE	1 2 3 4 5 6 7 8 9 A B C D E F G H I J K L M N O	
06A		00H03700211	BRIDA FIJ.TUBO ACT.A BOQ.GPR75 GHIERA FISSAGGIO TUBO OLIO AD COLLAR OIL FLEXIBLE TUBE	BEF.-SHELLE BRIDE TUYAU D4HUILE	1 2 3 4 5 6 7 8 9 A B C D E F G H I J K L M N O	
07A		00H03700101	EJE BOMBA ACEITE.74/80CC. ASSE POMPA OLIO 74/80CC PUMPOIL AXLE	OLPUMPUNACHSE AXE DE POMPE D,HUILLE	1 2 3 4 5 6 7 8 9 A B C D E F G H I J K L M N O	
08A		00053030000	PASAD.SUJ.ESPIR.3,-X20.D-7343. CHIAVISTELLO SOSTEGNO SPIRALE FORK PIN	STIFT GOUDILLE	1 2 3 4 5 6 7 8 9 A B C D E F G H I J K L M N O	
09A		00H05000281	ARAND.TOPE PIÑON INTERMD.74/80 RONDELLA FERMO PIGNONE INTERM. THRUST PLATE	SCHEIBE RONDELLE DE BUTEE	1 2 3 4 5 6 7 8 9 A B C D E F G H I J K L M N O	
10A		00000047110	ANILLO SEG.EJES D10.DIN-471. ANELLO SICUREZZA ASSI D10 D-47 CIRCLIP, BRAKE SHOE RETENTION	SEEGERRING CIRCLIP POUR AXE D10	1 2 3 4 5 6 7 8 9 A B C D E F G H I J K L M N O	
11A		00H03800381	PIÑON BOMBAS AGUA /ACEITE 80 C.C. PIGNONE ACQUA/OLIO 80 C.C. PUMP OIL GEAR	ZAHNRAD PIGNON POMPE D,HUILLE	1 2 3 4 5 6 7 8 9 A B C D E F G H I J K L M N O	

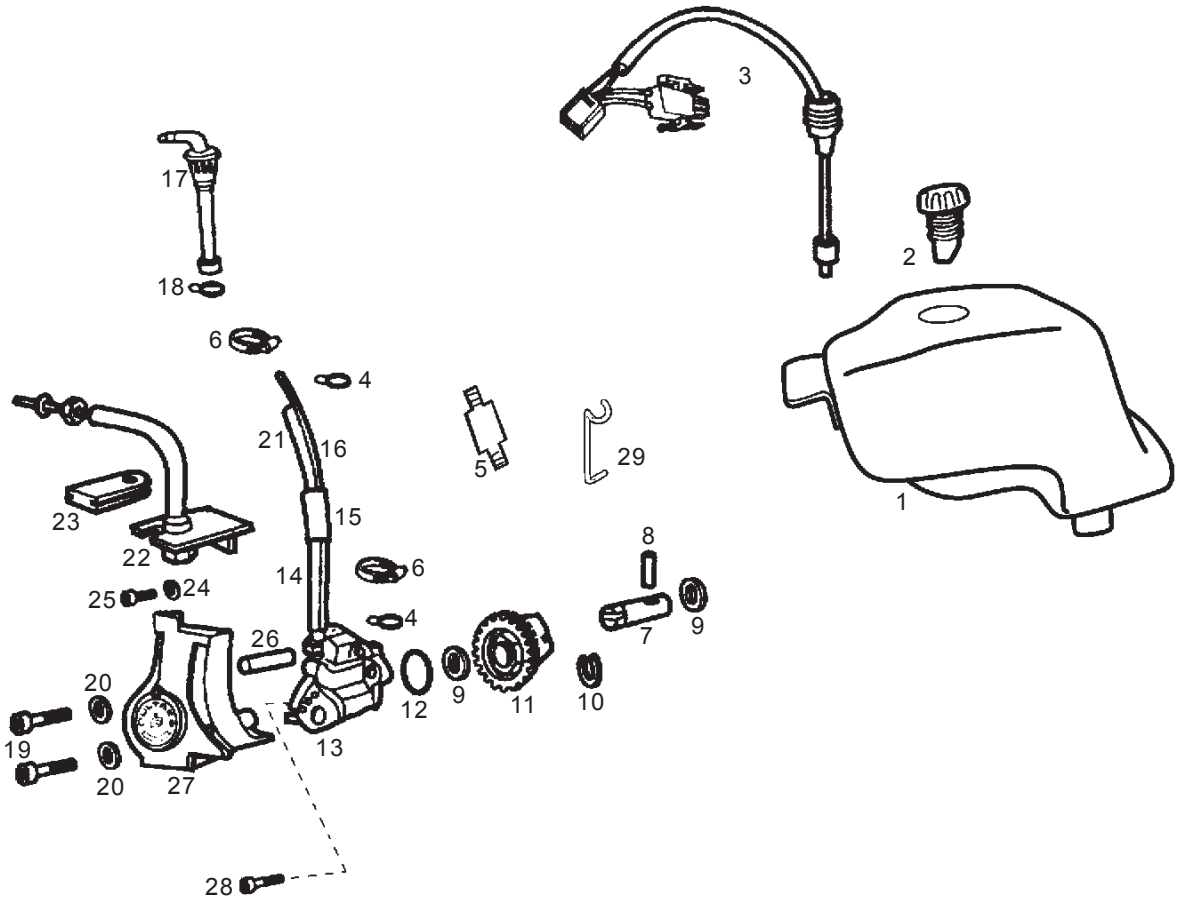

Fig.	Ver.	COD. KOD.	DESCRIPCIÓN DENOMINAZIONE NAME	BEZEICHNUNG DESIGNATION	MOD.	NOTAS NOTES NOTA MITSCHRIFT NOTES
12A		00H03701041	JUNTA TORICA BOMBA ACTE.GPR/75 GIUNTO TORICO POMPA OLIO GPR/7 O RING	RING PFROPFENSCHRAUBE JOINT	1 2 3 4 5 6 7 8 9 A B C D E F G H I J K L M N O	
13A		00H03702021	CTO.BOMBA ACEITE. COMPLESSO POMPA OLIO OIL PUMP	OLPUMPE POMPE A HUILLE	1 2 3 4 5 6 7 8 9 A B C D E F G H I J K L M N O	
14A		00H00400781	TUBO SALIDA DEP. ACEITE TUBO USCITA OLIO OIL FLEXIBLE PUMP TUBE	AUSGANGSROHR OLBEH TUYAU D'HUILE	1 2 3 4 5 6 7 8 9 A B C D E F G H I J K L M N O	
15A		00H03700351	MANGUITO UNION TUB.ACTE.74/80C MANICOTTO UNIONE TUBO OLIO OIL PIPE COUPLING CONNECTOR	VERBINDUNG MANCHON RACCORD TUYEAU D'HU	1 2 3 4 5 6 7 8 9 A B C D E F G H I J K L M N O	
16A		00H03701121	TUBO SALIDA ACTE.A BOQ.74/80CC TUBO USCITA OLIO A AD ATTACCO OIL FLEXIBLE PUMP TUBE TO ADAP	OLSCHLAUCH TUYAU D'HUILE	1 2 3 4 5 6 7 8 9 A B C D E F G H I J K L M N O	
17A		00H03701411	CTO.FILTRO ACEITE COMPLESSO FILTRO OLIO BY-PAS OIL FILTER	FILTER FILTRE A HUILLE	1 2 3 4 5 6 7 8 9 A B C D E F G H I J K L M N O	
18A		00008204500	ABRAZ.FIJ.GRIFO FASCETTA ELASTICA CLAMP	BEF.-SCHELLE ENTRETOISE	1 2 3 4 5 6 7 8 9 A B C D E F G H I J K L M N O	
19A		00002054551	TOR.C/ALLEN.5M80X45.NEG.D-912. VITE TESTA ALLEN 5M80X45. HEX.SOCKET-HEAD SCREW5M80X45	INBUSSCHRAUBE VIS T. CREUSE	1 2 3 4 5 6 7 8 9 A B C D E F G H I J K L M N O	
20A		00000033050	ARAND.MUELLE. D.5.DIN-127-B. RONDELLA MOLLA D.5.DIN-127-B. SPRING WASHER D5 D127	SCHEIBE RONDELLE GROWER D5 D127	1 2 3 4 5 6 7 8 9 A B C D E F G H I J K L M N O	
21A		00H00500581	TUBO SALIDA.DPTO.ACTE. TUBO USCITA SERBATOIO OLIO OIL FLEX, PUMP	AUSGANGSROHR OLBEH TUYAU D'HUILE	1 2 3 4 5 6 7 8 9 A B C D E F G H I J K L M N O	
22A		00H03700311	SCTO.SOPTE.GUIA CABLES.74CC. SUBCOMPLESSO SOSTEGNO GUIDA CA OIL CABLE, SUPPORT	HALTER F. KABELFUHRUNG SOUS-ENS SUPPORT CABLE HUIL	1 2 3 4 5 6 7 8 9 A B C D E F G H I J K L M N O	

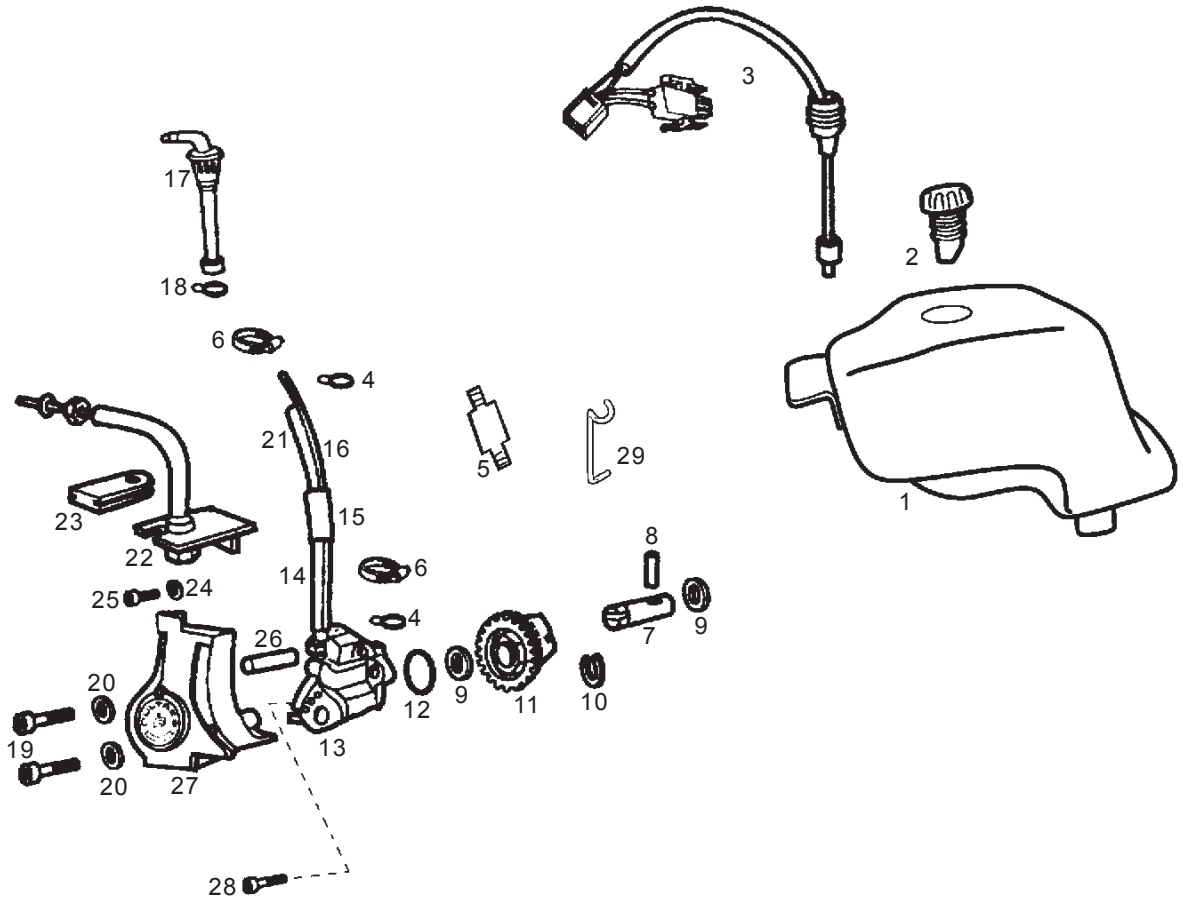

Fig.	Ver.	COD. KOD.	DESCRIPCIÓN DENOMINAZIONE NAME	BEZEICHNUNG DESIGNATION	MOD.	NOTAS NOTES NOTA MITSCHRIFT NOTES
23A		00H03700141	PASACAB.SAL.BOMBA ACTE.74/80CC PASSACAVI USCITA POMPA OLIO RUBBER	GUMMI CAOUTCHOUC	1 2 3 4 5 6 7 8 9 A B C D E F G H I J K L M N O	
24A		00000031050	ARAND.PLANA MEC.D.5.DIN125-B RONDELLA PIATTA D5 MACHINED FLAT WASHER D5	SCHEIBE D.5 DIN-125 ROND.PLATE MECANISEE D.5.DI	1 2 3 4 5 6 7 8 9 A B C D E F G H I J K L M N O	
25A		00000004510	TOR.C/ALLEN.5M80X10.DIN- VITE TESTA ALLEN 5M80X10 DIN- HEX.SOCKET-HEAD SCREW M5X10	SCHRAUBE VIS A TETE CREUSE 5M80X10	1 2 3 4 5 6 7 8 9 A B C D E F G H I J K L M N O	
26A		00H03700341	CASQ.TAPA BOMBA ACEITE.74CC. GHIERA COPERCHIO POMPA OLIO BUSHING, COVER OIL PUMP	BUCHSE ENTRETOISE COUVERCLE DE POM	1 2 3 4 5 6 7 8 9 A B C D E F G H I J K L M N O	
27A		00H03701012	TAPA BOMBA ACEITE CORPECHIO POMPA OLIO OIL PUMP HOUSING COVER	ABDECKUNG COUVERCLE DE POMPE A HUILLE	1 2 3 4 5 6 7 8 9 A B C D E F G H I J K L M N O	
28A		00002051551	TOR.C/ALLEN 5M80X15 D912/8.8 VITE TESTA ALLEN 5M80X15. ALLEN SCREW M5X15	INBUSSCHRAUBE 5M80X15 D912 VIS T.CREUSE 5M80X15 D912/8	1 2 3 4 5 6 7 8 9 A B C D E F G H I J K L M N O	
29A		00H03700201	MUELLE MOLLA SPRING	FEDER RESSORT	1 2 3 4 5 6 7 8 9 A B C D E F G H I J K L M N O	

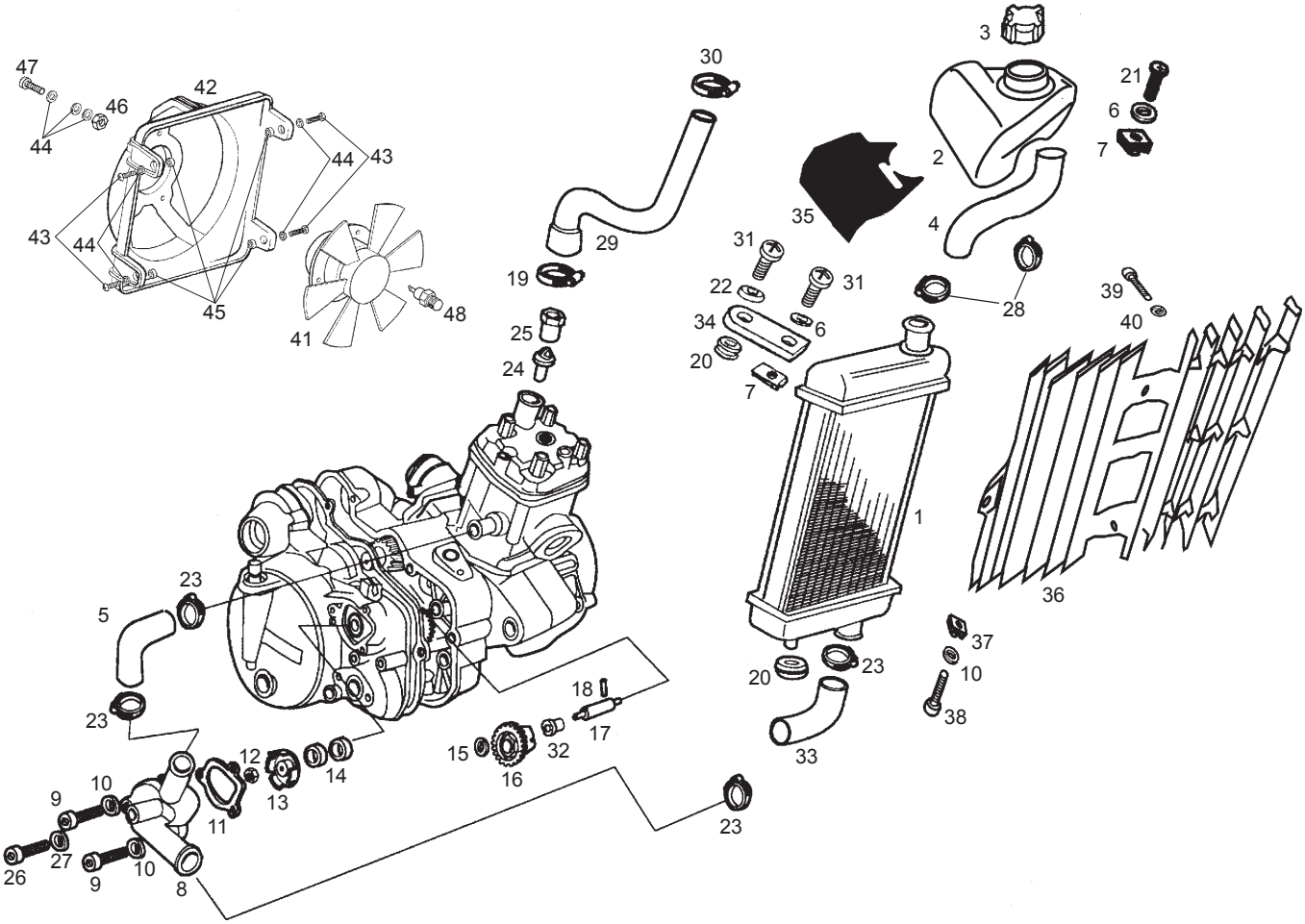

Fig.	Ver.	COD. KOD.	DESCRIPCIÓN DENOMINAZIONE NAME	BEZEICHNUNG DESIGNATION	MOD.	NOTAS NOTES NOTA MITSCHRIFT NOTES
01A		00H03805011	SCTO.RADIADOR SUBCOMPLESSO RADIATORE RADIATOR ASSY.	RADIATOR ASSY. RADIATEUR	1 2 3 4 5 6 7 8 D E F G H I J K	
01B		00H03806011	SCTO.RADIADOR SUBCOMPLESSO RADIATORE RADIATOR ASSY.	RADIATOR ASSY. RADIATEUR	9 A B C L M N O	
02A		00H03802501	DEPOSITO AGUA RADIADOR. SERBATOIO ACQUA RADIATORE WATER TANK	WASSERBEHALTER VASE D'EXPANSION	1 2 3 4 5 6 7 8 9 A B C D E F G H I J K L M N O	
03A		00H03802471	CTO.TAPON RADIAD/DEP.AG.GPR-75 TAPPO RADIATORE/SERBATOIO WATER RESERVOIR/RAD CAP ASSY	KUEHLERDECKEL BOUCHON DE RESERVOIR D,EAU	1 2 3 4 5 6 7 8 9 A B C D E F G H I J K L M N O	
04A		00G03800601	TUBO REFR.BOMBA-RADIAD. TUBO REFRIGERAZIONE POMPA-RADI RADIATOR PUMP RUBBER TUBE	KUHLMITTELSCHLAUCH PUMPE K TUBE POMPE-RADIATEUR	1 2 3 4 5 6 7 8 9 A B C D E F G H I J K L M N O	
05A		00H03801041	TUBO REFR.BOMBA-CILIND. TUBO REFRIGERAZIONE PUMP CILINDER RUBBER TUBE	KUHLMITTELSCHLAUCH PUMPE-Z TUBE POMPE-CYLINDRE	1 2 3 4 5 6 7 8 9 A B C D E F G H I J K L M N O	
06A		00D01200171	ARAND.EJE LEVA-FIJ.CUBRECAD. RONDELLA WASHER	SCHEIBE RONDELLE	1 2 3 4 5 6 7 8 9 A B C D E F G H I J K L M N O	
07A		00D01501371	TCA.FIJ.CUBRECAD.212827 DADO FISSAGGIO NUT	MUTTER ECROU	1 2 3 4 5 6 7 8 9 A B C D E F G H I J K L M N O	
08A		00H03800133	TAPA BOMBA AGUA PARDO ABEDUL COPERCHIO POMPA ACQUA 74/80CC WATER PUMP COVER	DECKEL F. WASSERPUMPE COUVERCLE DE POMPE D,EAU	1 2 3 4 5 6 7 8 9 A B C D E F G H I J K L M N O	
09A		00002052051	TOR.C/ALLEN 5M80X15 D912/8.8NG VITE TESTA ALLEN 5M80X15. ALLEN SCREW M5X15	INBUSSCHRAUBE 5M80X15 D912 VIS T.CREUSE 5M80X15 D912/8	1 2 3 4 5 6 7 8 9 A B C D E F G H I J K L M N O	
10A		00000031050	ARAND.PLANA MEC.D.5.DIN125-B RONDELLA PIATTA D5 MACHINED FLAT WASHER D5	SCHEIBE D.5 DIN-125 ROND.PLATE MECANISEE D.5.DI	1 2 3 4 5 6 7 8 9 A B C D E F G H I J K L M N O	

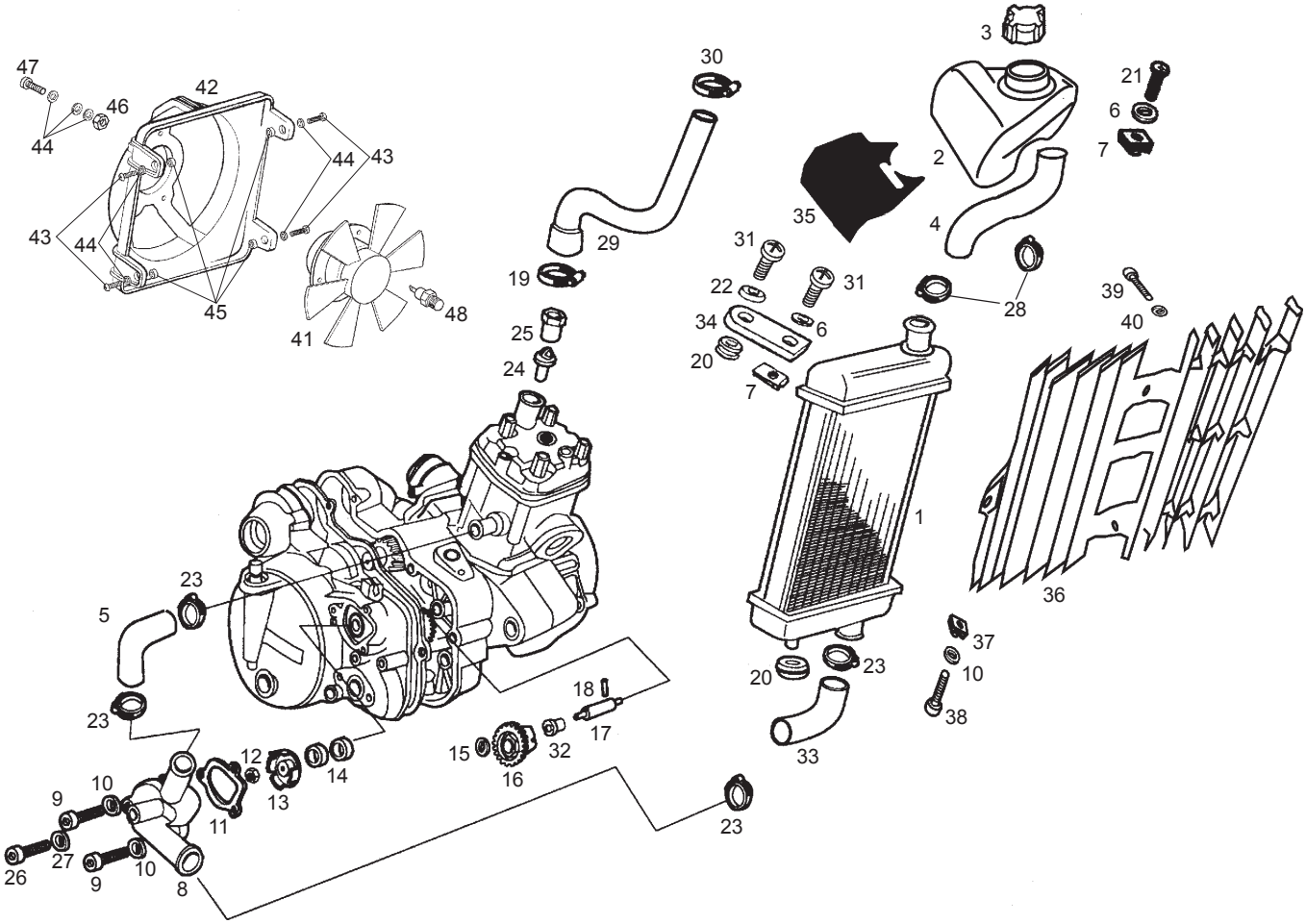

Fig.	Ver.	COD. KOD.	DESCRIPCIÓN DENOMINAZIONE NAME	BEZEICHNUNG DESIGNATION	MOD.	NOTAS NOTES NOTA MITSCHRIFT NOTES
11A		00H03800141	JUNTA TAPA BOMBA AGUA.74/80CC. GUARNIZIONE COPERCHIO POMPA AC GASKET	DICHTUNG F. WASSERPUMPENDE JOINT POMPE EAU	1 2 3 4 5 6 7 8 9 A B C D E F G H I J K L M N O	
12A		00M03800221	TCA.5M80 DE LATON DADO 5M80 OTTONE NUT	MUTTER ECROU	1 2 3 4 5 6 7 8 9 A B C D E F G H I J K L M N O	
13A		00H03800151	RODETE BOMBA AGUA.80CC. ROCCHETTO POMPA ACQUA 80CC WATER PUMP ROLLER	LAUFER F. WASSERPUMP CHIGNON POMPE D,EAU	1 2 3 4 5 6 7 8 9 A B C D E F G H I J K L M N O	
14A		00H03810211	RETEN EJE BOMBA AGUA 10X24X6 GIUNTO TENUTA POMPA ACQUA 10X2 SEAL, WATER PUMP	DICHTRING BUTEE POMPE A EAU (UNITE)	1 2 3 4 5 6 7 8 9 A B C D E F G H I J K L M N O	
15A		00H05000281	ARAND.TOPE PIÑON INTERMD.74/80 RONDELLA FERMO PIGNONE INTERM. THRUST PLATE	SCHEIBE RONDELLE DE BUTEE	1 2 3 4 5 6 7 8 9 A B C D E F G H I J K L M N O	
16A		00H03800381	PIÑON BOMBAS AGUA/ACEITE.80CC. PIGNONE POMPE ACQUA/OLIO PUMP OIL GEAR	ZAHNRAD PIGNON POMPE D,HUILLE	1 2 3 4 5 6 7 8 9 A B C D E F G H I J K L M N O	
17A		00H03800161	EJE BOMBA AGUA.74/80CC. ASSE POMPA ACQUA WATER-PUMP SHAFT	WASSERPUMPENACHSE AXE POMPE D,AEU	1 2 3 4 5 6 7 8 9 A B C D E F G H I J K L M N O	
18A		00053030000	PASAD.SUJ.ESPIR.3,-X20.D-7343. CHIAVISTELLO SOSTEGNO SPIRALE FORK PIN	STIFT GOUDILLE	1 2 3 4 5 6 7 8 9 A B C D E F G H I J K L M N O	
19A		00H03800451	ABRAZ.GRIFO GASOL.D20 FASCETTA RUBINETTO BENZINA . PETROL VALVE CLAMP	BEF. SCHELLE COLLIER	1 2 3 4 5 6 7 8 9 A B C D E F G H I J K L M N O	
20A		00008915020	PROTECCION CABLES. PROTEZIONE CAVI RUBBER,CABLE PROTECTOR	GUMMI PASSE-CABLE	1 2 3 4 5 6 7 8 9 A B C D E F G H I J K L M N O	
21A		00012161600	TOR.C/RED.CRUZ.6M100X16.DIN- VITE TONDO CROCE .6M100X16.DIN SCREW,6M100X16	SCHRAUBE 6M100X16 D-7985 VIS T.CROIX NOIR 6M100X16 D	1 2 3 4 5 6 7 8 9 A B C D E F G H I J K L M N O	

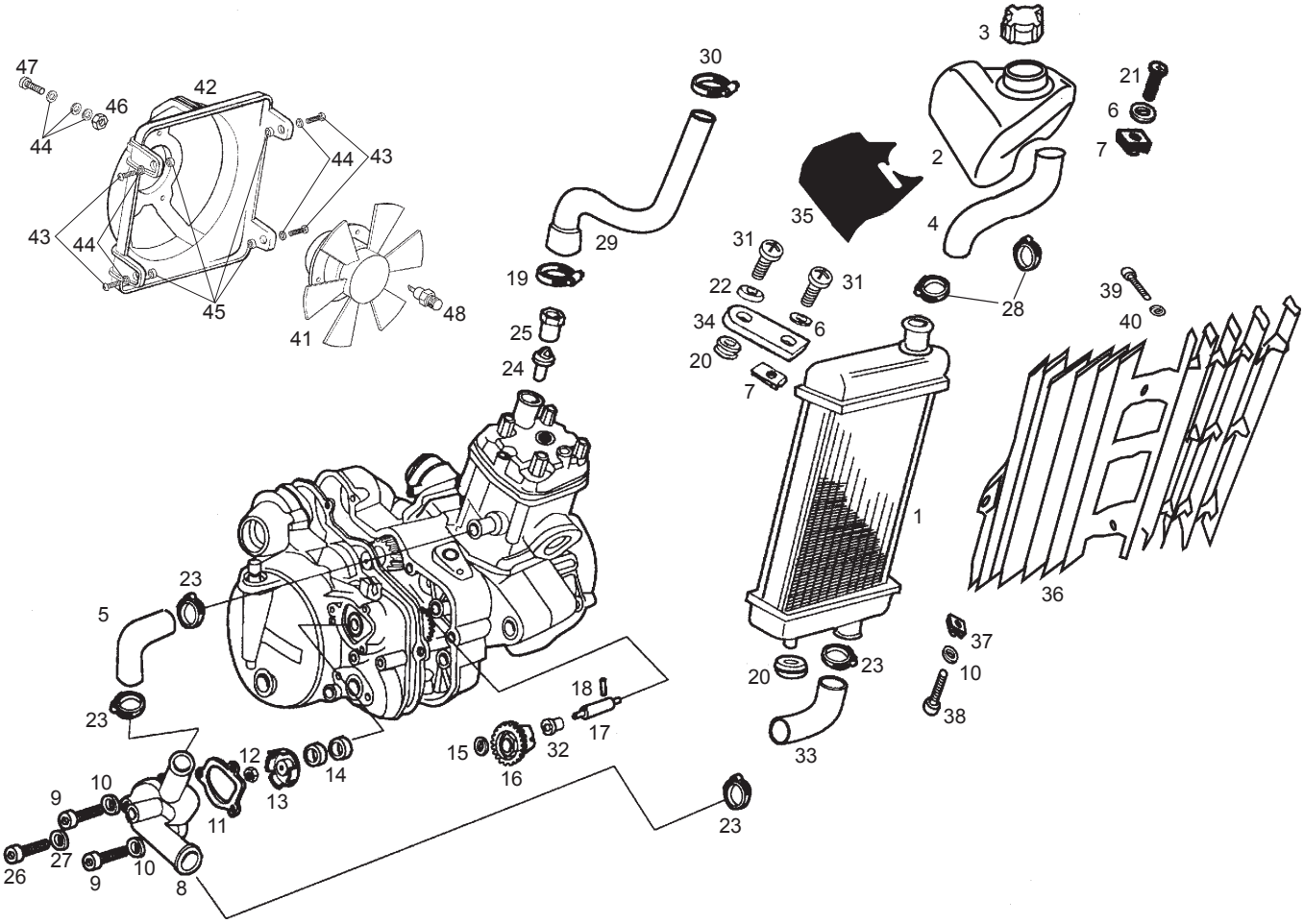

Fig.	Ver.	COD. KOD.	DESCRIPCIÓN DENOMINAZIONE NAME	BEZEICHNUNG DESIGNATION	MOD.	NOTAS NOTES NOTA MITSCHRIFT NOTES
22A		00D01500552	CAZLTA.FIJ.SILENC. SCADELLINO FISSAGGIO HOUSING EXHAUST PIPE SUPPORT	ABDECKSCHEIBE CUVETTE	1 2 3 4 5 6 7 8 9 A B C D E F G H I J K L M N O	
23A		00H03800751	ABRAZ.FIJ.MANG.A CILINDRO D21 FASCETTA FISSAGGIO TUBO COBRA CLAMP	BEF.-SHELLE COLLIER COBRA 21/8 W4	1 2 3 4 5 6 7 8 9 A B C D E F G H I J K L M N O	
24A		00H03800431	TERMOSTATO.74/80CC. TERMOSTATO.74/80CC. TERMOSTATE.	THERMOSTAT THERMOSTAT	1 2 3 4 5 6 7 8 9 A B C D E F G H I J K L M N O	
25A		00H03810421	TCA.FIJ.TERMOSTATO GPR/75 DADO FISSAGGIO TERMOSTATO GP NUT	MUTTER ECROU	1 2 3 4 5 6 7 8 9 A B C D E F G H I J K L M N O	
26A		00002051251	TOR.C/ALLEN 5M80X12 VITE TESTA ALLEN 5M80X12 ALLEN SCREW M5X12	INBUSSCHRAUBE 5M80X12 VIS A TETE CREUSE 5M80X12 N	1 2 3 4 5 6 7 8 9 A B C D E F G H I J K L M N O	
27A		00H03800441	ARAND.TOR.VACIADO AGUA 74/80CC RONDELLA VITE SVUOTAMENTO ACQU WASHER	SCHEIBE RONDELLE	1 2 3 4 5 6 7 8 9 A B C D E F G H I J K L M N O	
28A		00G03801701	ABRAZ.FIJ.MANG.RADIAD.D25 FASCETTA FISSAGGIO MANICA RADI CLAMP FASTERING RADIATOR BUSHI	OIL TANK FLANGE TUBE BRIDE TUBE RESPIRATION RÎSERVO	1 2 3 4 5 6 7 8 9 A B C D E F G H I J K L M N O	
29A		00H03804021	TUBO CULATA-RADIADOR TUBO TESTATA-RACCORDO TERMOCON CYLINDER HEAD PIPE-TERMOCONTAC	WASSERSCHLAUCH TUBE	1 2 3 4 5 6 7 8 9 A B C D E F G H I J K L M N O	
30A		00008204500	ABRAZADERA FIJACION GRIFO FASCETTA RUBINETTO FUEL LOCK SEGURING CLAMP	BEF.-SHELLE F. HANN BRIDE FIXATION ROBINET	1 2 3 4 5 6 7 8 9 A B C D E F G H I J K L M N O	
31A		00092061214	TOR.C/R.CR.6M100X12.NG.D-7985. VITE TONDO CROCE 6M100X12 SCREW M6X12	SCHRAUBE.6M100X12.NG.D-798 VIS A TETE RONDE A FENTES C	1 2 3 4 5 6 7 8 9 A B C D E F G H I J K L M N O	
32A		00H03800231	CASQ.EJES BOMBAS.74CC. GHIERA ASSI POMPE 74 CC PUMP SHAFT BUSHING 74CC	BUCHSE PUMPENACHSEN DOUILLES AXES POMPES	1 2 3 4 5 6 7 8 9 A B C D E F G H I J K L M N O	

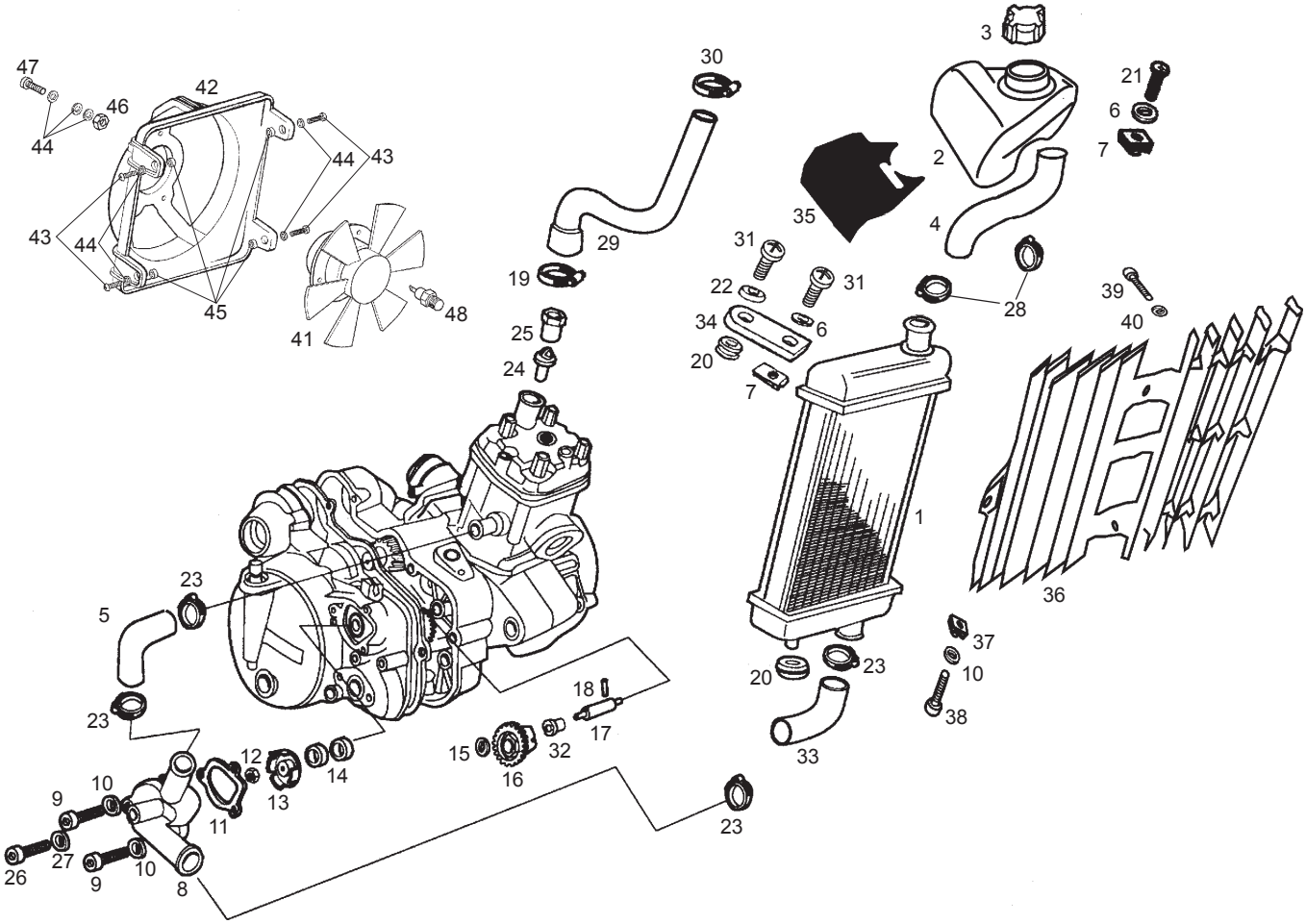

Fig.	Ver.	COD. KOD.	DESCRIPCIÓN DENOMINAZIONE NAME	BEZEICHNUNG DESIGNATION	MOD.	NOTAS NOTES NOTA MITSCHRIFT NOTES
33A		00H03802031	TUBO REFR.BOMBA-RADIA. TUBO REFRIGERAZIONE POMPA-RADI RADIATOR PUMP RUBBER TUBE	KUHLMITTELSCHLAUCH PUMPE K TUBE POMPE-RADIATEUR	1 2 3 4 5 6 7 8 9 A B C D E F G H I J K L M N O	
34A		00G02200692	OREJA SUP. SOPTE. RADIADOR PIASTRA SUPPORTO SUPERIORE UPPER RADIATOR SUPPORT	OESE KUEHLERBLOCK OREILLE SUPE. SUPPORT RAD	1 2 3 4 5 6 7 8 9 A B C D E F G H I J K L M N O	
35A		00H03801711	CALCA DEPOSITO AGUA ADESIVO DECAL	SCHRIFTZUG ADHESIF	1 2 3 4 5 6 7 8 9 A B C D E F G H I J K L M N O	
36A		00H03805301	REJILLA RADIADOR GRIGLIA RADIATORE RADIATOR GRID	RADIATOR RADIATEUR	1 2 3 4 5 6 7 8 9 A B C D E F G H I J K L M N O	
37A		00G04401462	TCA.FIJ.CUBRECAD.212827 DADO FISSAGGIO NUT	MUTTER ECROU	1 2 3 4 5 6 7 8 9 A B C D E F G H I J K L M N O	
38A		00012151500	TOR.C/RED.ALL.5M100X16.D7380 VITE T/TON.BRUGO.6M100X16.D738 ALLEN ROUND HEAD SCREW 6M100X1	SCHRAUBE 5M8OX16.D7985NG VIS A TETE RONDE A FENTES C	1 2 3 4 5 6 7 8 9 A B C D E F G H I J K L M N O	
39A		00011141300	TOR.AUT.C/CR.NG.4,8X13.D-7981B VITE AUTOFILETTANTE TESTA CROC SCREW, SELF TAPPING 4.8MM13	SCHRAUBE BOULON	1 2 3 4 5 6 7 8 9 A B C D E F G H I J K L M N O	
40A		00D02600631	ARAND.TOPE MUELLE EMBRAGUE RONDELLA WASHER	SCHEIBE RONDELLE	1 2 3 4 5 6 7 8 9 A B C D E F G H I J K L M N O	
41A		00H05701551	CTO. ELECTROVENTILADOR COMPLESSO ELEVTROVENTOLA ELECTROVENTILATOR	VENTILATOR VENTILATEUR	9 A B C L M N O	
42A		00H06803031	TAPA ELECTROVENTILADOR COPERCHIO ELETROVENTOLA RADIATOR-ELECTROVENTILATOR COV	VENTILATORABDCCKUNG CACHE VENTILATEUR	9 A B C L M N O	
43A		00011131300	TORNILL0 VITE AUTOAVV.T/CROCE SELF TAPPING SCREW 3.5X13	SCHRAUBE VIS 3,5X13 D-7981B	9 A B C L M N O	

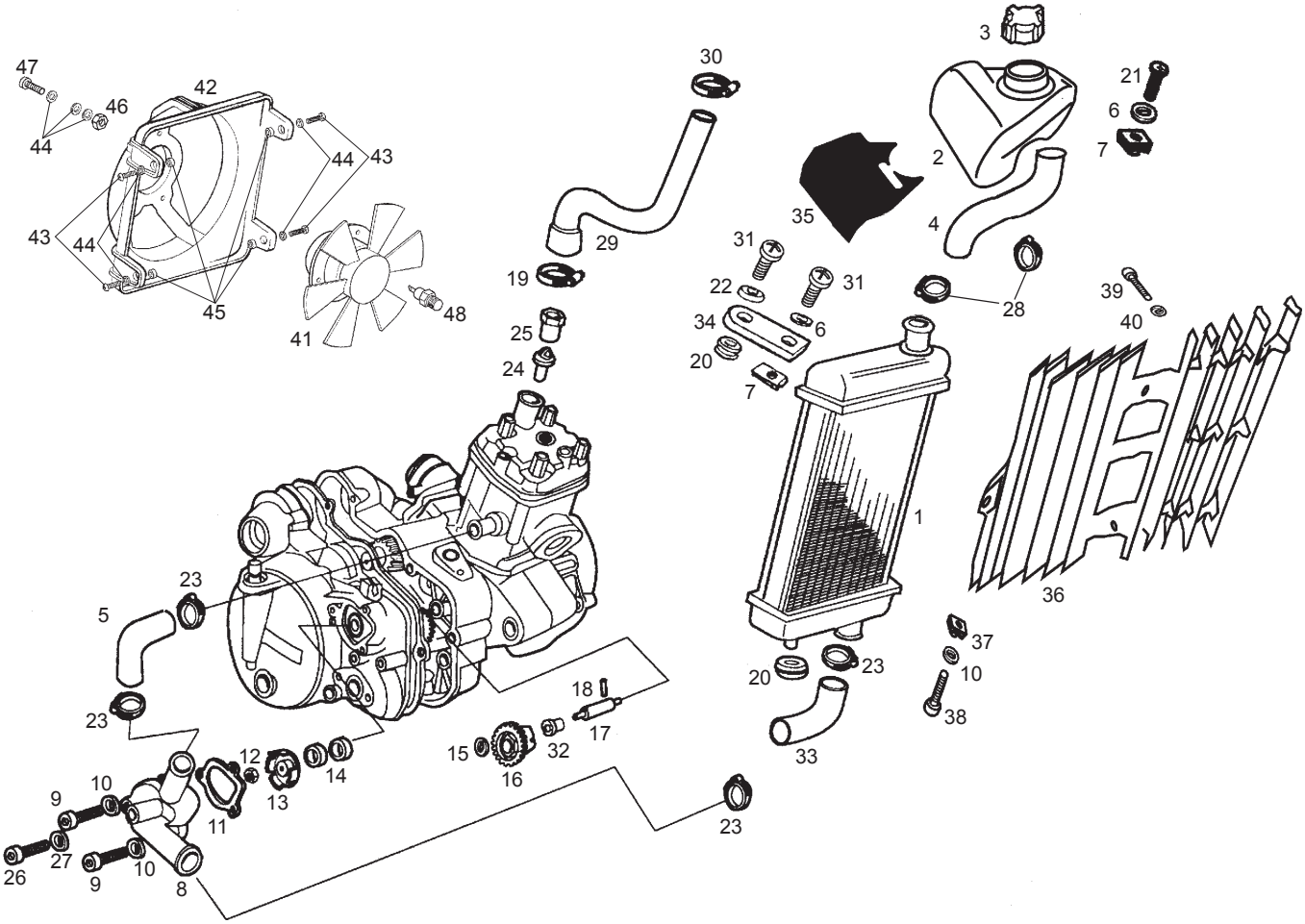

Fig.	Ver.	COD. KOD.	DESCRIPCIÓN DENOMINAZIONE NAME	BEZEICHNUNG DESIGNATION	MOD.	NOTAS NOTES NOTA MITSCHRIFT NOTES
44A		00000031040	ARANDELA RONDELLA PIATTA MECCANIZZATA D MACHINED FLAT WASHER D4	SCHEIBE D.4 RONDELLE PLATE MECANISEE D4	9 A B C L M N O	
45A		00H06800061	SEPARADOR GHIERA DESTRA FISSAGGIO COPER. BUSHING RIGHT ELECTROVENTIL	BUCHSE DOVILLE	9 A B C L M N O	
46A		00000023040	TUERCA AUTOBLOCANTE DADO AUTOBOCCANTE 4M70 DIN-98 SELF LOCKING NUT 4M70	MUTTER SELBSTS ECROU INDESSERABLE 4M70	9 A B C L M N O	
47A		00000002420	TORNILLO VITE TONDO CROCE 4M70X20 D7985 N ROUNDHEAD PHILIPS SCREW 4MM	SCHRAUBE VIS T.RON CROIX 4M70X20	9 A B C L M N O	
48A		00G03800741	TERMOCONTACTO TERMOCONTATTO ELETTROVENTOLA THERMOCONTACT ELECTROVENTILATO	THEMPERATURFUHLER THERMOCONTACTEUR	9 A B C L M N O	

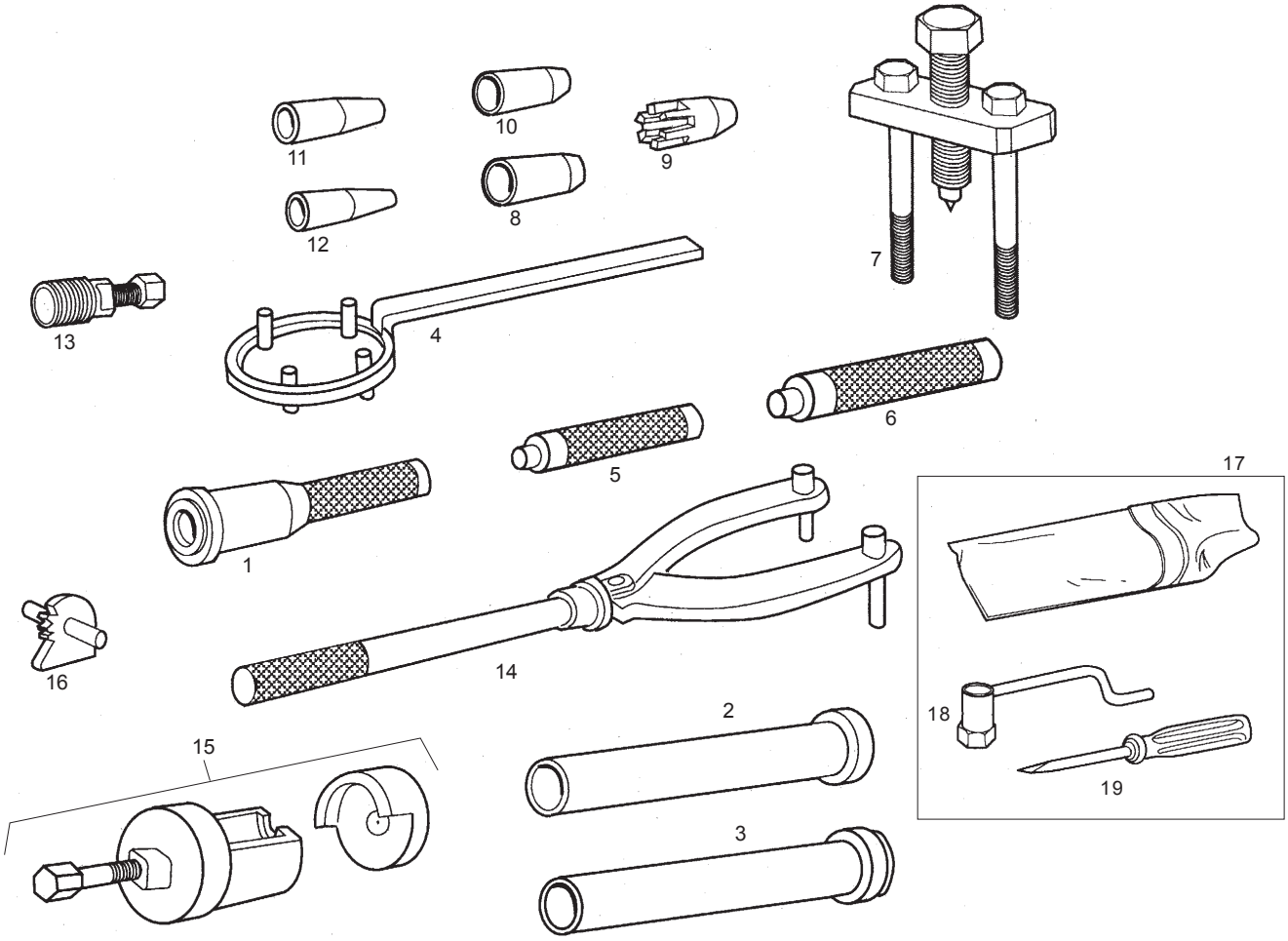

Fig.	Ver.	COD. KOD.	DESCRIPCIÓN DENOMINAZIONE NAME	BEZEICHNUNG DESIGNATION	MOD.	NOTAS NOTES NOTA MITSCHRIFT NOTES
01A		00H05400451	R-PUNZON MONT.RETENES CIGÑ.GPR R-PUNTERUOLO MONTAGGIO GIUNTI PUNCH FIXING CRANKCASE SEAL	DURCHSCHLAG OUTIL MONTAGE ANNEAU AXE VI	1 2 3 4 5 6 7 8 9 A B C D E F G H I J K L M N O	
02A		00H05400581	R-UTIL MONTAR RETEN EJE ARRQ. UTENSILE MONTAGGIO GIUNTI TENU TOOLS FOR FIXING IN STARTING	MONTAGEHUELSE OUTIL MONTAGE ANNEAU AXE DE	1 2 3 4 5 6 7 8 9 A B C D E F G H I J K L M N O	
03A		00H05401561	R-UTIL MONT.RETEN EJE SELECT. R-UTILE MONTAGGIO GIUNTO TENUT TOOL FOR FIXING SEAL IN SELEC	MONTAGEHULSE OUTIL MONTAGE ANNEAU AXE SE	1 2 3 4 5 6 7 8 9 A B C D E F G H I J K L M N O	
04A		00H05300041	R-CTO.UTIL.FIJ.CAMPNA EMBG.GPR R-UTILE FISSAGGIO CA CLUTCH HOUSING HOLDER	BEF.-WKZG.KUPPLUNGSGLOCKE OUTIL FIXATION EMBRAYAGE	1 2 3 4 5 6 7 8 9 A B C D E F G H I J K L M N O	
05A		00H05600251	R-UTIL MONT.CASQ.AGUJ.PIÑ.INTM R-UTILE MONTAGGIO GHIERA FORO TOOLS FOR FIXING BUSHING NEEDL	MONTAGEHULSE OUTIL MONTAJE	1 2 3 4 5 6 7 8 9 A B C D E F G H I J K L M N O	
06A		00H05600241	R-UTIL MONT.CASQ.AGUJ.EJE 1P. R-UTILE MONTAGGIO GHIERA FORO TOOLS FOR FIXING BUSHING NEEDL	MONTAGEHULSE OUTILLAGE MONTAGE DOUILLE A	1 2 3 4 5 6 7 8 9 A B C D E F G H I J K L M N O	
07A		00H05300151	R-CTO.UTIL ABRIR MOTOR GPR-75 R-UTILE APRIRE MOTOR TOOLS OPEN ENGINE ASSY	WKZG.Z.MOTOR OFFNEN ENSEMBLE OUTILLAGE OUVRIR M	1 2 3 4 5 6 7 8 9 A B C D E F G H I J K L M N O	
08A		00H05300841	CASQ. GUIA RETEN CIGÑ. R-UTILE APRIRE MOTOR TOOLS OPEN ENGINE ASSY	WKZG.Z.MOTOR OFFNEN ENSEMBLE OUTILLAGE OUVRIR M	1 2 3 4 5 6 7 8 9 A B C D E F G H I J K L M N O	
09A		00H05600351	PIVOTE GUIA RET.EJE SECUND.GPR PERNO GUIDA GIUNTO TENUTA ASSE PIVOT GUIDE SECONDARY AXEL,S	FUHRUNGSZAPFEN PIVOT GUIDE JOINT AXE SECON	1 2 3 4 5 6 7 8 9 A B C D E F G H I J K L M N O	
10A		00H05600341	PIVOTE GUIA RET.EJE ARRQ.GPR75 PERNO GUIDA GIUNTO TENUTA ASSE PIVOT GUIDE STARTING AXEL,S SE	FUHRUNGSZAPFEN PIVOT GUIDE JOINT AXE DEMAR	1 2 3 4 5 6 7 8 9 A B C D E F G H I J K L M N O	
11A		00H05600331	PIVOTE GUIA RET.EJE DESEMB.GPR PERNO GUIDA GIUNTO TENUTA ASSE PIVOT GUIDE SEAL OF CLUTCH REL	FUHRUNGSZAPFEN PIVOT GUIDE JOINT AXE DEBRA	1 2 3 4 5 6 7 8 9 A B C D E F G H I J K L M N O	

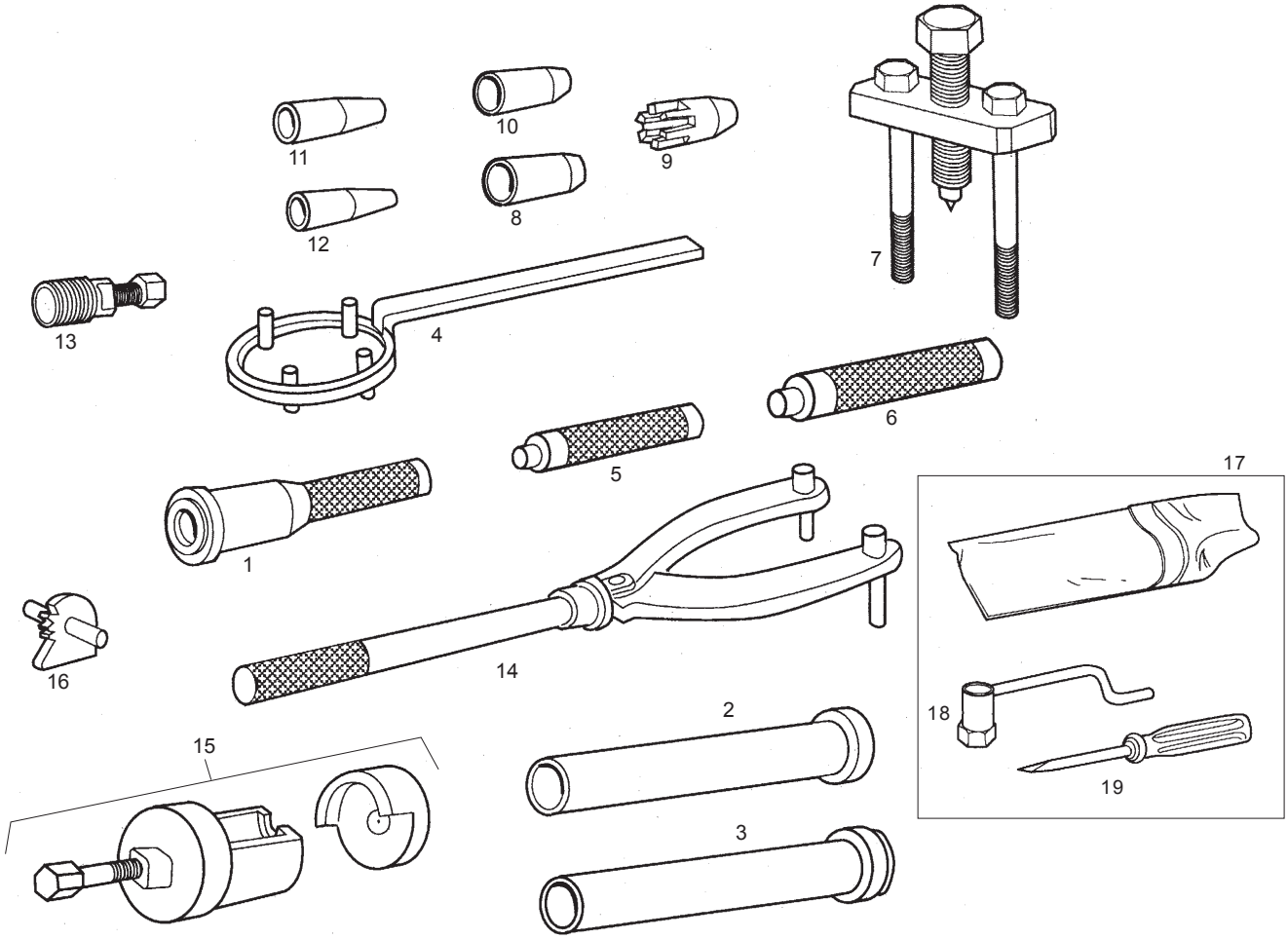

Fig.	Ver.	COD. KOD.	DESCRIPCIÓN DENOMINAZIONE NAME	BEZEICHNUNG DESIGNATION	MOD.	NOTAS NOTES NOTA MITSCHRIFT NOTES
12A		00H05600261	PIVOTE GUIA RET.EJE BOMBA AGUA PERNO GUIDA GIUNTO TENUTA ASSE PIVOT GUIDE SEAL WATER PUMP	FUHRUNSZAPFEN PIVOT GUIDE JOINT POMPE D,E	1 2 3 4 5 6 7 8 9 A B C D E F G H I J K L M N O	
13A		00F05300021	EXTRAC.VOLTE.ELECTR.DCT.SCO-50 ESTRATTORE VOLANO E FLYWHEEL ELECTR. EXTRACTOR	ABZIEHER EXTRACTEUR DE VOLANT	1 2 3 4 5 6 7 8 9 A B C D E F G H I J K L M N O	
14A		00G05300011	CTO.UTIL DESMTAR.VOLTE.ELECTR. CHIAVE VOLANO MAG./CAMPANA FR. MAGNETO EXTRACTOR TOOL	WERKZEUG Z.DEMONTAGE ELEKT ENS.OUTIL DEMONTER VOLANT E	1 2 3 4 5 6 7 8 9 A B C D E F G H I J K L M N O	
15A		00H05600321	CTO.EXTRACTOR ESTRATTORE PIGNONE COUNTERWEIGHT SPROKET PULLER	RITZELHALTER ESSEMBLE EXTRACTEUR PIGNON	1 2 3 4 5 6 7 8 9 A B C D E F G H I J K L M N O	
16A		00H05600231	R-SCTO.EJE PIÑON CONTRAPESO R-SUBASSE PIGNONE COUNTERWEIGHT SPROKET AXLE	BEF.-ACHSEF.RITZEL ENSEMBLE AXE PIGNON CONTREP	1 2 3 4 5 6 7 8 9 A B C D E F G H I J K L M N O	
17A		00H05101561	CTO.BOLSA HERRTAS. SACCO FERRI TOOL POUCH	WERKZEUGTASCHE TROUSSE A OUTILS	1 2 3 4 5 6 7 8 9 A B C D E F G H I J K L M N O	
18A		00H05100011	SCTO.LLAVE BUJIA SUBCHIAVE CANDELA SE SPARK PLUG	ZUND KERZENSCHLUSSEL CLE A BOUGIE	1 2 3 4 5 6 7 8 9 A B C D E F G H I J K L M N O	
19A		00005551290	DESTORNILLADOR. CACCIAVITE SCREW DRIVER	SCHRAUBENZIEHER TOURNEVIS	1 2 3 4 5 6 7 8 9 A B C D E F G H I J K L M N O	

CODIGO CODE	Lám. Diagr.	Figr.	Vers.	CODIGO CODE	Lám. Diagr.	Figr.	Vers.	CODIGO CODE	Lám. Diagr.	Figr.	Vers.	CODIGO CODE	Lám. Diagr.	Figr.	Vers.
00A00900531	006	21A		00F04601121	004	37A		00H00204231	002	23A		00H00618485	005	19D	
00A03000121	018	08A		00F04700121	008	25A		00H00204471	002	17A		00H00618486	005	19C	
00A03000132	018	27A		00F04700121	010	27A		00H00204601	002	04A		00H00618601	005	18E	
00A03001422	018	07A		00F05000061	018	31A		00H00205271	002	07A		00H00618602	005	18B	
00D00900531	007	04A		00F05300021	024	13A		00H00210171	002	11A		00H00618604	005	18A	
00D00940291	006	16A		00G00400181	004	11A		00H00211011	002	10A		00H00618605	005	18D	
00D01000701	006	24A		00G00400501	004	10A		00H00213091	002	09A		00H00618606	005	18C	
00D01100201	010	04A		00G00800261	006	30A		00H00227001	002	13A		00H00702261	005	25E	
00D01200171	003	18A		00G01000911	007	32A		00H00300621	003	22A		00H00702262	005	25B	
00D01200171	004	29A		00G01001571	007	16A		00H00300912	003	21A		00H00702263	005	25C	
00D01200171	005	03A		00G01500951	021	03A		00H00301401	003	05A		00H00702264	005	25A	
00D01200171	007	24A		00G01503701	005	09A		00H00303331	003	15A		00H00702265	005	25D	
00D01200171	020	13A		00G01503701	010	06A		00H00303892	003	11A		00H00705121	005	13A	
00D01200171	023	06A		00G01601581	011	07A		00H00308971	003	01A		00H00708431	005	01H	
00D01300091	008	05A		00G01602581	011	06A		00H00400501	022	04A		00H00708432	005	01F	
00D01300192	003	06A		00G01607051	011	10A		00H00400781	022	14A		00H00708433	005	01G	
00D01301401	008	11A		00G02102081	006	05A		00H00401521	004	34A		00H00708434	005	01E	
00D01303401	009	10A		00G02200692	023	34A		00H00404051	004	24A		00H00708435	005	01D	
00D01500021	005	31A		00G03000211	018	22A		00H00404471	004	36A		00H00708436	005	01B	
00D01500021	011	05A		00G03001091	013	18A		00H00404681	004	01H		00H00708437	005	01C	
00D01500471	004	32A		00G03001091	018	23A		00H00404682	004	01F		00H00708438	005	01A	
00D01500552	004	22A		00G03002091	018	24A		00H00404684	004	01E		00H00709251	005	33E	
00D01500552	023	22A		00G03200061	019	09A		00H00404686	004	01G		00H00709252	005	33B	
00D01501371	003	19A		00G03200101	019	19A		00H00406011	004	09A		00H00709253	005	33C	
00D01501371	004	28A		00G03200511	019	11A		00H00414681	004	01B		00H00709254	005	33A	
00D01501371	005	08A		00G03200541	019	15A		00H00414682	004	01A		00H00709255	005	33D	
00D01501371	007	23A		00G03200551	019	16A		00H00414683	004	01D		00H00712341	005	11A	
00D01501371	020	12A		00G03200721	019	17A		00H00414684	004	01C		00H00800422	001	28A	
00D01501371	023	07A		00G03200731	019	18A		00H00500581	022	21A		00H00803082	001	10A	
00D01520096	001	20A		00G03201071	019	10A		00H00515651	005	14E		00H00805072	001	12A	
00D01540456	001	31A		00G03201091	019	24A		00H00515652	005	14B		00H00820011	001	09A	
00D02100901	006	22A		00G03201371	019	12A		00H00515654	005	14A		00H00900351	006	19A	
00D02120811	006	10A		00G03201431	019	03A		00H00515655	005	14D		00H00902301	006	17A	
00D02200671	006	29A		00G03204272	004	13A		00H00515656	005	14C		00H00907301	006	17A	01
00D02600552	014	12A		00G03206031	019	05A		00H00516641	005	17E		00H00908011	006	01A	
00D02600631	007	45A		00G03208031	019	05B		00H00516642	005	17B		00H00916171	006	03A	
00D02600631	010	26A		00G03301271	020	05A		00H00516644	005	17A		00H00917751	006	11A	
00D02600631	014	15A		00G03301401	020	15A		00H00516645	005	17D		00H00930071	006	15A	
00D02600631	021	16A		00G03400321	021	18A		00H00516646	005	17C		00H00930091	006	04A	
00D02600631	023	40A		00G03701031	022	05A		00H00541691	005	15H		00H01000131	007	10A	
00D02820101	016	02A		00G03800601	023	04A		00H00541692	005	15F		00H01000371	007	13A	
00D02910131	017	04A		00G03800741	023	48A		00H00541694	005	15E		00H01001701	010	07A	
00D03210491	004	27A		00G03801701	023	28A		00H00541695	005	15D		00H01002341	007	11A	
00D03700131	004	12A		00G03900821	018	19A		00H00541696	005	15B		00H01002821	007	37A	
00D04000291	016	32A		00G04100131	019	20A		00H00541698	005	15A		00H01004841	007	21A	
00D05700141	007	09A		00G04100741	019	21A		00H00541699	005	15G		00H01006321	007	12A	
00D05910081	021	13A		00G04100771	019	23A		00H00541701	005	16H		00H01007141	006	13A	
00E02500231	013	13A		00G04400752	005	12A		00H00541702	005	16F		00H01013011	007	06A	
00F00400131	004	07A		00G04401461	007	46A		00H00541704	005	16E		00H01027301	007	01A	02
00F00400771	004	08A		00G04401462	005	24A		00H00541705	005	16D		00H01029301	007	01A	01
00F00403321	004	14A		00G04401462	010	29A		00H00541706	005	16B		00H01100172	010	17A	
00F00900531	020	16A		00G04401462	023	37A		00H00541708	005	16A		00H01100461	010	13A	
00F00902291	006	06A		00G04401481	004	35A		00H00541709	005	16G		00H01101211	010	08A	
00F00910291	006	16A	01	00G04700131	008	15A		00H00549691	005	15C		00H01101731	010	05A	
00F01001311	007	22A		00G04700131	010	30A		00H00549701	005	16C		00H01102072	010	15A	
00F01210312	009	12A		00G04700141	008	20A		00H00600341	004	18A		00H01102181	010	12A	
00F01811411	001	33A		00G04700141	010	23A		00H00604141	004	02A		00H01102582	010	21A	
00F02804371	016	22A		00G05001061	021	19A		00H00618011	004	17E		00H01103611	010	14A	
00F03201211	019	02A		00G05300011	024	14A		00H00618012	004	17B		00H01109081	010	01A	
00F03300241	020	08A		00G06300671	005	27A		00H00618013	004	17C		00H01120021	010	16A	
00F03300731	020	06A		00H00201701	002	24A		00H00618014	004	17A		00H01202192	008	19A	
00F03310741	020	04A		00H00202501	002	06A		00H00618015	004	17D		00H01202331	008	26A	
00F03710131	004	16A		00H00202531	002	14A		00H00618481	005	19E		00H01203272	008	02A	
00F03710241	022	02A		00H00202761	002	03A		00H00618482	005	19B		00H01205711	008	08A	
00F04201361	021	15A		00H00203741	002	02A		00H00618484	005	19A		00H01207101	008	13A	

CODIGO CODE	Lám. Diagr.	Figr.	Vers.	CODIGO CODE	Lám. Diagr.	Figr.	Vers.	CODIGO CODE	Lám. Diagr.	Figr.	Vers.	CODIGO CODE	Lám. Diagr.	Figr.	Vers.
00H01208021	008	07A		00H02104611	006	27A		00H02800241	016	34A		00H03433011	021	17A	
00H01211081	008	12A		00H02105611	006	27A	01	00H02800251	016	13A		00H03442081	021	01B	
00H01211111	008	14A		00H02200021	005	26A		00H02800401	016	19A		00H03603521	014	01A	
00H01301731	009	19A		00H02200022	005	26B		00H02800561	016	15A		00H03700101	022	07A	
00H01301831	008	17A		00H02201302	001	24A		00H02800801	016	28A		00H03700131	010	09A	
00H01301831	010	22A		00H02201312	001	06A		00H02800881	016	27A		00H03700141	022	23A	
00H01302052	009	09A		00H02201591	005	30A		00H02800891	016	36A		00H03700201	022	29A	
00H01302172	009	11A		00H02205671	006	28A		00H02800901	016	04A		00H03700211	022	06A	
00H01303691	008	09A		00H02229371	007	05H		00H02801221	016	08A		00H03700311	022	22A	
00H01303691	009	20A		00H02229372	007	05F		00H02801291	016	01A		00H03700341	022	26A	
00H01304091	009	06A		00H02229373	007	05G		00H02801481	016	10A		00H03700351	022	15A	
00H01304202	003	02A		00H02229374	007	05E		00H02802161	016	35A		00H03700461	018	18A	
00H01304202	009	02A		00H02229375	007	05D		00H02802861	016	31A		00H03701012	022	27A	
00H01305531	009	16A		00H02229376	007	05B		00H02805131	016	06A		00H03701041	022	12A	
00H01306351	009	17A		00H02229377	007	05C		00H02805371	016	22B		00H03701121	022	16A	
00H01307821	009	14A		00H02229378	007	05A		00H02810181	016	18A		00H03701411	022	17A	
00H01309361	009	22A		00H02300961	007	33A		00H02810231	016	09A		00H03702021	022	13A	
00H01311321	009	23A		00H02302441	013	20A		00H02810411	016	21A		00H03703051	022	03A	
00H01317031	009	15B		00H02304381	006	14A		00H02810421	016	23A		00H03704081	022	01A	
00H01319032	009	15A		00H02304501	007	30A		00H02810561	016	16A		00H03800133	023	08A	
00H01501212	009	24A		00H02402282	008	18A		00H02810631	016	29A		00H03800141	023	11A	
00H01501501	001	21A		00H02403281	009	18A		00H02810741	016	30A		00H03800151	023	13A	
00H01501811	003	32A		00H02425271	009	01B		00H02820211	016	07A		00H03800161	023	17A	
00H01501811	010	10A		00H02426271	009	01A		00H02820561	016	17A		00H03800181	014	25A	
00H01502101	001	32A		00H02500041	013	08A		00H02820651	016	26A		00H03800231	023	32A	
00H01502201	009	07B		00H02500272	001	18A		00H02820661	016	37A		00H03800381	022	11A	
00H01502501	001	29A		00H02500301	013	11A		00H02900011	017	12A		00H03800381	023	16A	
00H01502741	007	40A		00H02500491	018	30A		00H02900041	017	10A		00H03800431	023	24A	
00H01503101	001	30A		00H02500811	018	28A		00H02900091	017	06A		00H03800441	014	20A	
00H01508181	003	16A		00H02501131	013	05A		00H02900271	017	11A		00H03800441	023	27A	
00H01508191	003	10A		00H02501491	018	11A		00H02900281	017	07A		00H03800451	023	19A	
00H01521201	009	07A		00H02502111	013	03A		00H02900761	017	02A		00H03800722	007	14A	
00H01526321	007	02E		00H02502121	013	04A		00H02901441	017	08A		00H03800751	023	23A	
00H01526322	007	02B		00H02502891	018	29A		00H02901551	017	09A		00H03801041	023	05A	
00H01526323	007	02C		00H02505021	013	07A		00H02902251	017	13A		00H03801711	023	35A	
00H01526324	007	02A		00H02506141	013	09A		00H03000031	018	02A		00H03802031	023	33A	
00H01526325	007	02D		00H02507061	018	20A		00H03000081	018	14A		00H03802471	023	03A	
00H01600911	011	04A		00H02510641	018	21A		00H03000091	018	26A		00H03802501	023	02A	
00H01610381	011	11A		00H02512013	013	06A		00H03000141	018	05A		00H03804021	023	29A	
00H01610521	011	01A	02	00H02542091	013	02A		00H03000242	018	06A		00H03805011	023	01A	
00H01612521	011	01A	01	00H02552091	013	02B		00H03000272	001	26A		00H03805301	023	36A	
00H01617021	011	09A		00H02562091	013	02C		00H03000831	018	10A		00H03806011	023	01B	
00H01620521	011	01B		00H02572091	013	02D		00H03002884	018	04A		00H03810211	023	14A	
00H01701301	007	27A		00H02600111	014	03A		00H03003634	018	01A		00H03810421	023	25A	
00H01701391	007	29A		00H02600151	014	07A		00H03010361	018	03A		00H04106181	019	06A	
00H01704071	007	28A		00H02600181	014	13A		00H03201201	019	22A		00H04302181	004	06A	
00H01800401	021	08A		00H02600211	014	14A		00H03201251	004	26A		00H04316651	011	08A	
00H01800541	004	25A		00H02600271	014	09A		00H03202231	019	13A		00H04427801	005	05H	
00H01800811	003	26A		00H02600322	014	22A		00H03202281	019	08A		00H04427802	005	05F	
00H01801721	003	23A		00H02600342	014	19A		00H03203481	019	07A		00H04427803	005	05G	
00H01801771	001	15A		00H02600401	014	27A		00H03203711	019	14A		00H04427804	005	05E	
00H01801791	003	28A		00H02600551	014	10A		00H03204421	019	04A		00H04427805	005	05D	
00H01802081	002	18A		00H02600651	014	26A		00H03207261	004	33A		00H04427806	005	05B	
00H01802291	003	24A		00H02601011	014	11A		00H03239011	019	01A		00H04427807	005	05C	
00H01803331	003	09A		00H02601161	014	08A		00H03245011	019	01B		00H04427808	005	05A	
00H01803771	003	25A		00H02601381	014	02A		00H03300221	020	07A		00H04427831	005	06H	
00H01961601	001	01A		00H02610311	014	18A		00H03300701	020	02B		00H04427832	005	06F	
00H02003541	002	05A		00H02700151	015	01A		00H03301011	020	01B		00H04427833	005	06G	
00H02003871	002	12A		00H02700231	015	03A		00H03303701	020	02A		00H04427834	005	06E	
00H02011031	002	15A		00H02700251	015	09A		00H03307011	020	01A		00H04427835	005	06D	
00H02011041	002	16A		00H02700441	015	04A		00H03330171	020	03B		00H04427836	005	06B	
00H02100191	006	07A		00H02700451	015	05A		00H03331171	020	03A		00H04427837	005	06C	
00H02100861	006	08A		00H02700491	015	06A		00H03404321	021	11A		00H04427838	005	06A	
00H02101011	006	18A		00H02703421	015	10A		00H03423411	021	02A		00H04603871	001	34A	
00H02101621	006	02A		00H02800181	016	11A		00H03426082	021	01A		00H04607841	007	35A	

CODIGO CODE	Lám. Diagr.	Figr.	Vers.	CODIGO CODE	Lám. Diagr.	Figr.	Vers.	CODIGO CODE	Lám. Diagr.	Figr.	Vers.	CODIGO CODE	Lám. Diagr.	Figr.	Vers.
00H04608841	007	34A		00H99927U003	012	01A		00002062511	015	11A		00012161600	005	29A	
00H04714081	008	01A		00M03800221	023	12A		00002082021	011	12A		00012161600	007	20A	
00H04900231	005	32A		0000A517011	007	26A		00002125170	013	17A		00012161600	023	21A	
00H04903292	001	22A		00000002420	023	47A		00002182000	009	08A		00012162000	005	02A	
00H04912091	005	20H		00000002816	021	05A		00002212070	008	10A		00012162000	020	11A	
00H04912092	005	20F		00000002840	010	25A		00002212070	009	21A		00013054500	003	27A	
00H04912094	005	20E		00000004510	022	25A		00002215152	001	25A		00014041200	006	09A	
00H04912095	005	20D		00000004512	016	24A		00002225220	013	14A		00022083521	008	21A	
00H04912096	005	20B		00000004620	006	23A		00002503230	003	04A		00022084021	001	04A	
00H04912098	005	20A		00000004840	002	01A		00002518790	001	17A		00022084521	001	07A	
00H04912099	005	20G		00000012415	021	14A		00003102280	018	13A		00022086521	008	24A	
00H04918561	005	04E		00000012420	020	14A		00003112320	008	03A		00023108000	001	05A	
00H04918562	005	04B		00000012508	006	20A		00003112322	003	03A		00023108000	010	20A	
00H04918563	005	04C		00000012515	007	44A		00003115422	003	12A		00023112000	003	13A	
00H04918564	005	04A		00000013510	016	05A		00003125280	013	19A		00023208000	021	07A	
00H04918565	005	04D		00000021060	007	17A		00003127200	017	19A		00026006001	021	12A	
00H04918571	005	07E		00000021080	006	32A		00003130050	018	16A		00031106000	002	22A	
00H04918572	005	07B		00000023040	023	46A		00003133230	020	09A		00031106000	007	41A	
00H04918573	005	07C		00000023051	003	14A		00003133260	020	10A		00034000802	008	23A	
00H04918574	005	07A		00000023051	007	15A		00003710110	007	07A		00034000802	010	24A	
00H04918575	005	07D		00000023060	007	31A		00003710120	007	08A		00036008000	001	02A	
00H04922091	005	20C		00000023060	009	25A		00004013500	002	19A		00037000600	017	21A	
00H05000281	014	04A		00000023080	006	31A		00004053500	007	36A		00047030400	004	04A	
00H05000281	014	28A		00000031040	023	44A		00004061600	021	09A		00047030900	017	16A	
00H05000281	022	09A		00000031050	003	31A		00004162500	017	20A		00047031100	015	02A	
00H05000281	023	15A		00000031050	005	21A		00004383500	002	08A		00052062011	014	23A	
00H05001011	013	16A		00000031050	022	24A		00005010760	006	25A		00053030000	022	08A	
00H05007123	013	01A		00000031050	023	10A		00005527540	010	19A		00053030000	023	18A	
00H05100011	024	18A		00000031060	003	30A		00005529290	017	05A		00057120300	016	03A	
00H05101561	024	17A		00000031060	005	28A		00005530600	018	17A		00058020301	016	38A	
00H05144651	005	35E		00000031060	018	25A		00005551290	024	19A		00058120100	008	04A	
00H05144652	005	35B		00000031080	006	33A		00006309260	006	26A		00058120100	009	05A	
00H05144653	005	35C		00000031080	021	06A		00006309260	010	02A		00059220400	013	12A	
00H05144654	005	35A		00000031100	002	20A		00006321040	006	12A		00073481964	004	31A	
00H05144655	005	35D		00000033050	022	20A		00006321040	010	03A		00092061214	023	31A	
00H05205481	012	02A		00000033060	021	10A		00006826230	014	05A		00103061212	003	29A	
00H05300041	024	04A		00000034050	016	25A		00008061500	002	21A		00232080021	001	13A	
00H05300151	024	07A		00000036100	017	17A		00008202730	013	15A		00232120032	008	16A	
00H05300841	024	08A		00000047110	014	17A		00008204500	022	18A		00262080022	001	08A	
00H05400451	024	01A		00000047110	022	10A		00008204500	023	30A		00262100032	001	27A	
00H05400581	024	02A		00000047111	017	03A		00008213182	008	06A		00262120032	009	13A	
00H05401561	024	03A		00000047122	017	14A		00008902630	001	11A		00402060001	007	18A	
00H05600231	024	16A		00000056205	001	14A		00008915020	004	21A		00402060001	009	03A	
00H05600241	024	06A		00000061040	017	18A		00008915020	023	20A		00402080001	001	03A	
00H05600251	024	05A		00000066060	016	33A		00011021300	007	19A		00402080001	008	22A	
00H05600261	024	12A		00000326260	014	06A		00011041300	003	08A		00402080001	010	18A	
00H05600321	024	15A		00001113192	009	04A		00011051601	005	22A		00402100001	001	23A	
00H05600331	024	11A		00001130370	018	15A		00011051801	004	19A		00442060002	015	12A	
00H05600341	024	10A		00002025190	013	10A		00011131300	023	43A		00454050001	011	03A	
00H05600351	024	09A		00002026020	014	24A		00011141300	003	20A					
00H05700101	007	43A		00002027280	014	21A		00011141300	010	11A					
00H05700481	007	39A		00002027280	015	07A		00011141300	023	39A					
00H05701061	007	47A		00002028450	016	12A		00012045000	007	03A					
00H05701551	023	41A		00002028550	016	14A		00012053500	014	16A					
00H06001151	019	25A		00002028770	015	08A		00012061200	003	07A					
00H06100261	004	23A		00002028770	017	01A		00012061200	004	20A					
00H06201061	004	15A		00002028900	016	20A		00012061200	007	25A					
00H06301401	001	16A		00002029050	017	15A		00012063000	007	42A					
00H06303752	004	05A		00002030020	018	09A		00012151500	010	28A					
00H06303762	004	03A		00002051251	023	26A		00012151500	023	38A					
00H06500451	001	19A		00002051551	022	28A		00012152000	005	23A					
00H06800061	023	45A		00002052051	023	09A		00012152000	011	02A					
00H06800461	007	38A		00002054551	022	19A		00012161600	003	17A					
00H06803031	023	42A		00002061011	018	12A		00012161600	004	30A					
00H99927E301	012	01B		00002062011	021	04A		00012161600	005	10A					